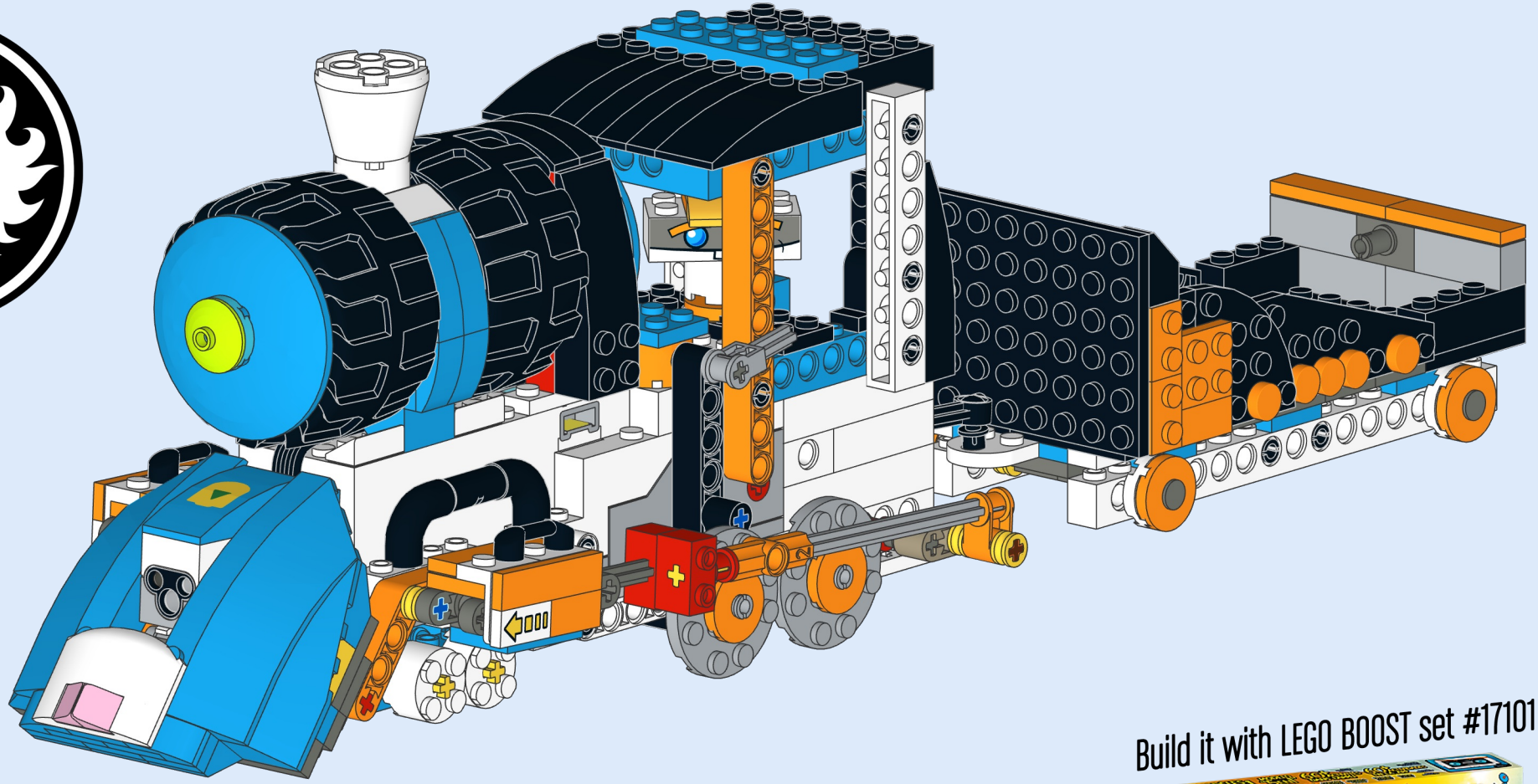

Steam Locomotive

Daniele Benedettelli - 2020

Build it with LEGO BOOST set #17101

© Benedettelli 2020 - For NON-commercial use only - Please report improper use

1

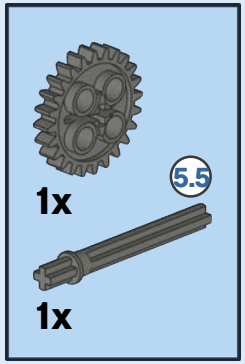

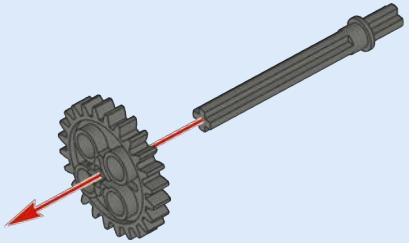

© Benedettelli 2020 - For NON-commercial use only - Please report improper use

2

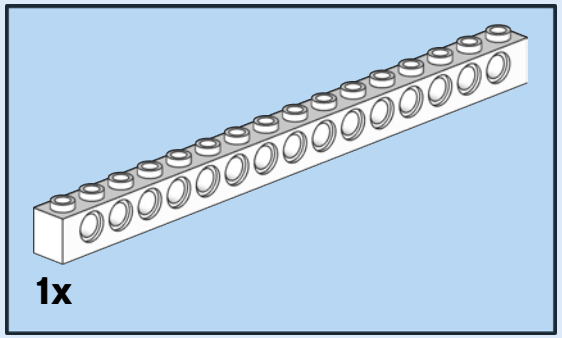

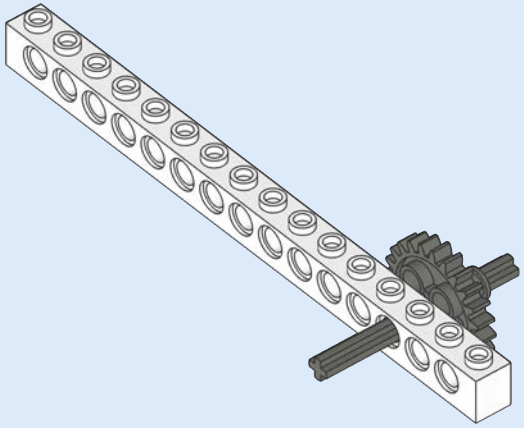

© Benedettelli 2020 - For NON-commercial use only - Please report improper use

3

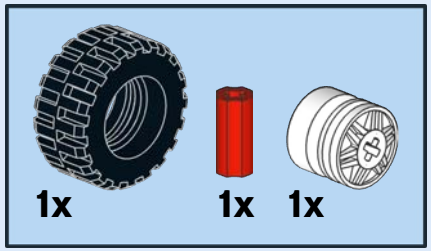

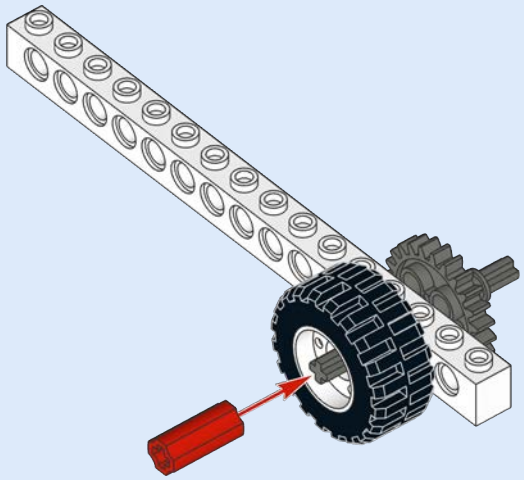

© Benedettelli 2020 - For NON-commercial use only - Please report improper use

4

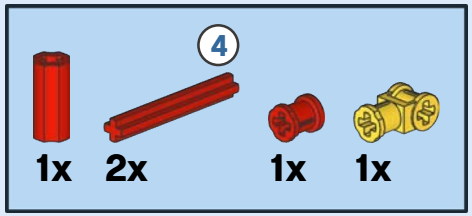

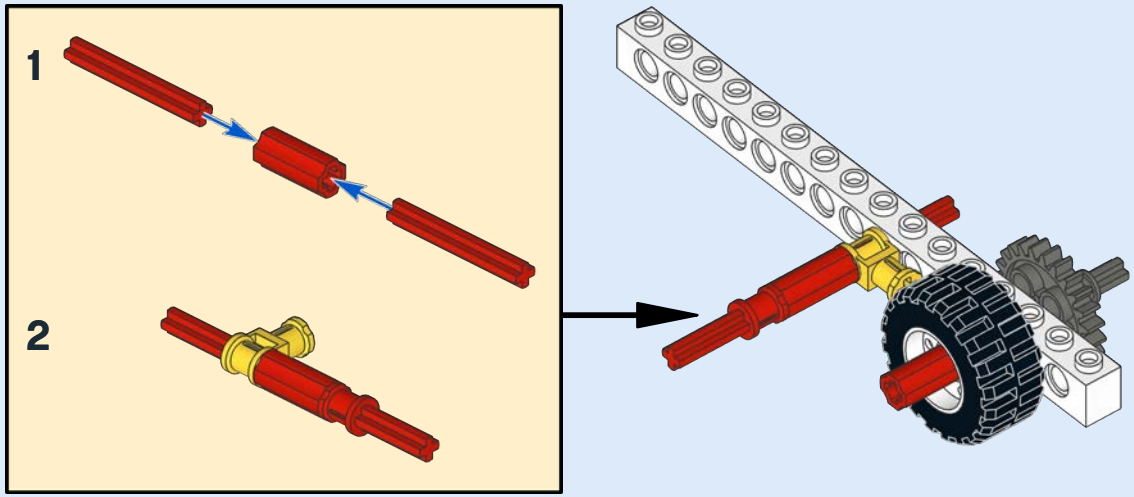

© Benedettelli 2020 - For NON-commercial use only - Please report improper use

5

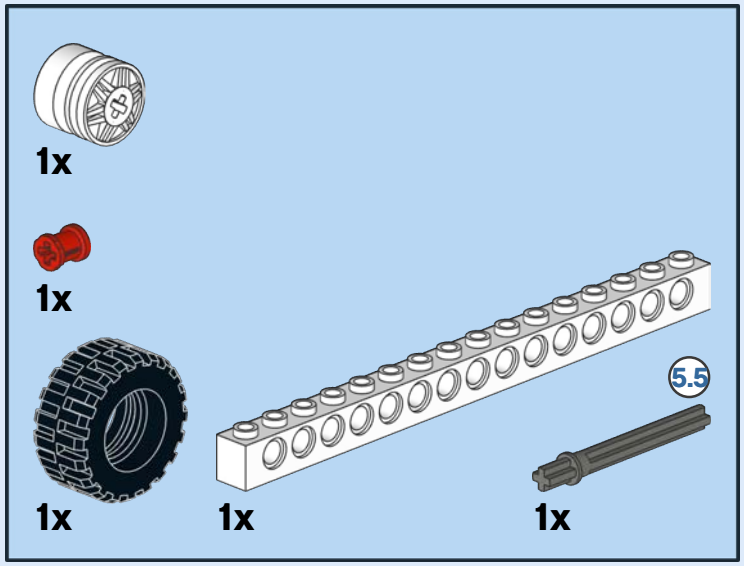

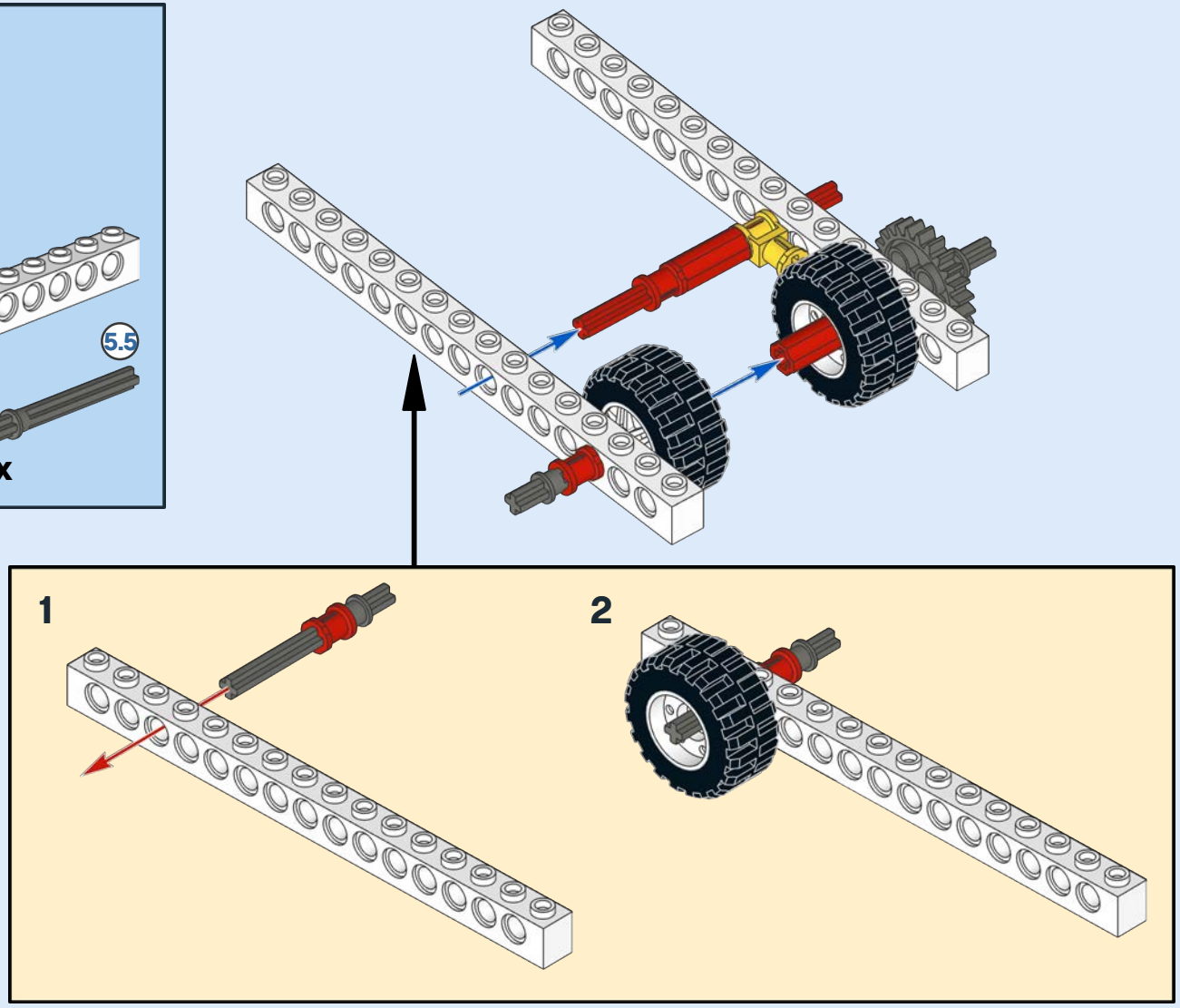

© Benedettelli 2020 - For NON-commercial use only - Please report improper use

6

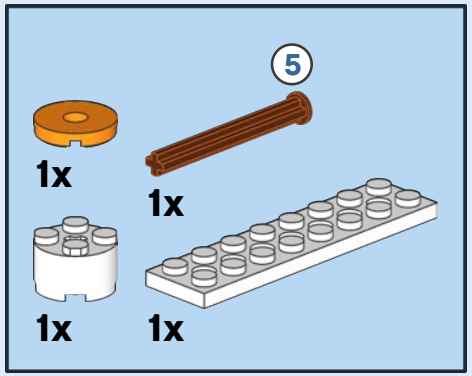

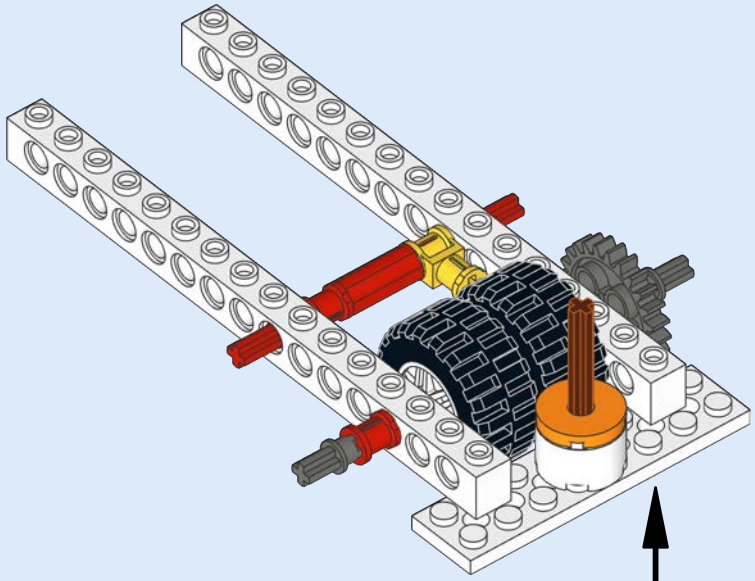

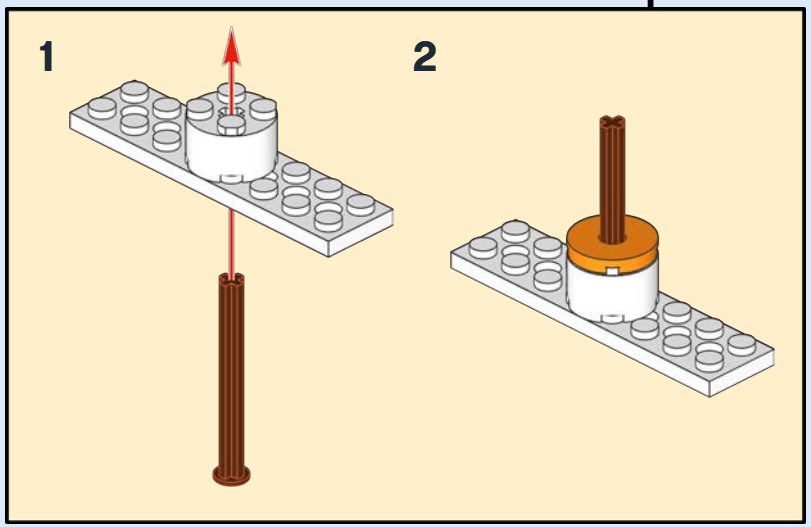

© Benedettelli 2020 - For NON-commercial use only - Please report improper use

7

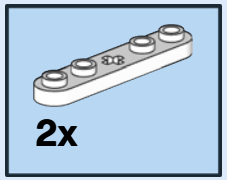

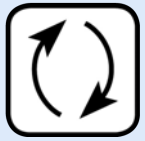

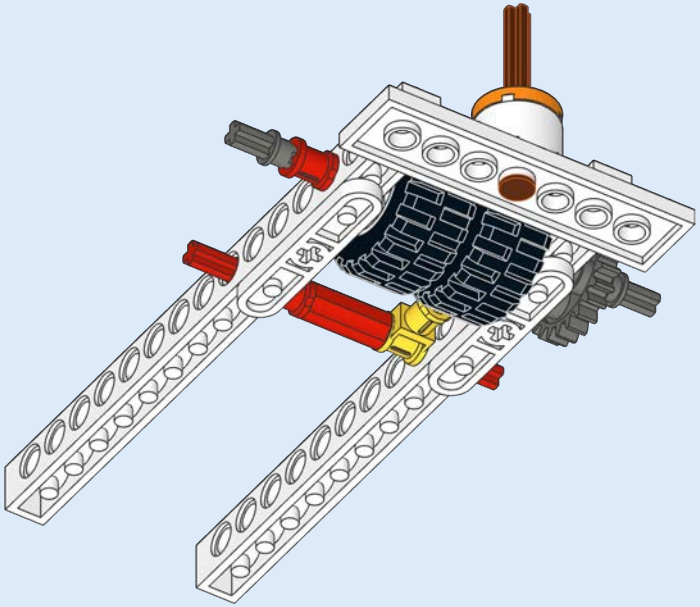

© Benedettelli 2020 - For NON-commercial use only - Please report improper use

8

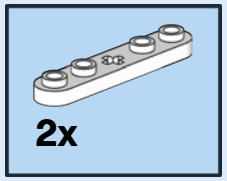

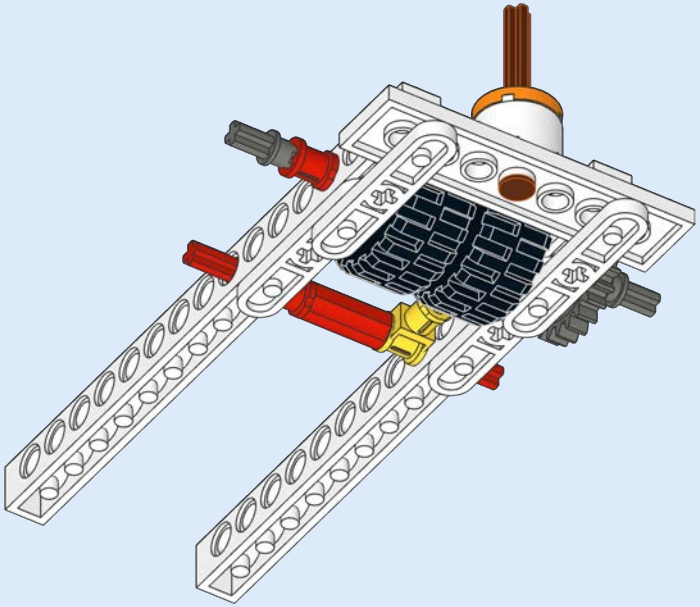

© Benedettelli 2020 - For NON-commercial use only - Please report improper use

9

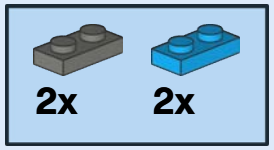

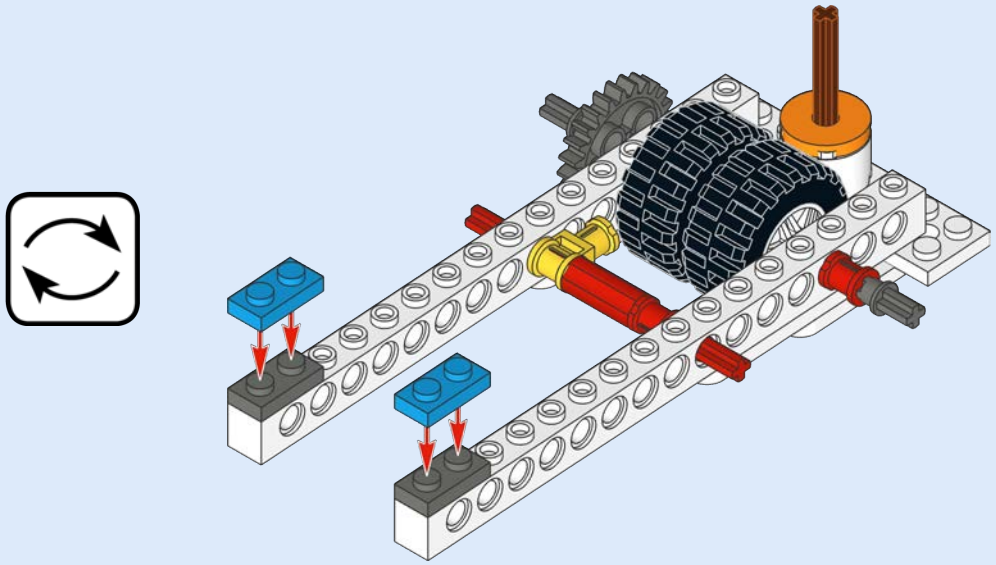

© Benedettelli 2020 - For NON-commercial use only - Please report improper use

10

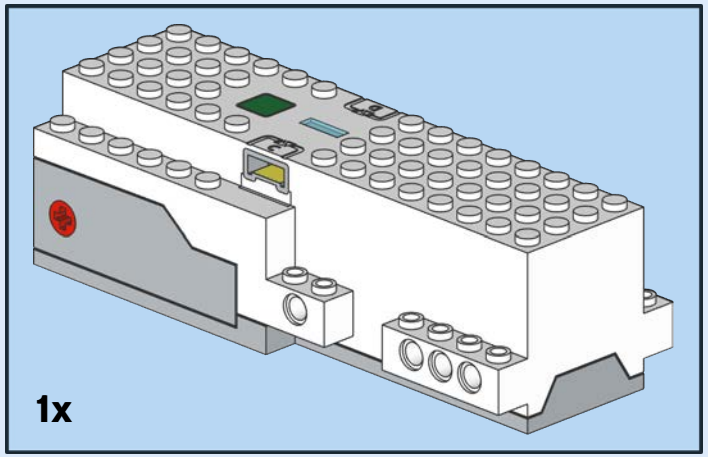

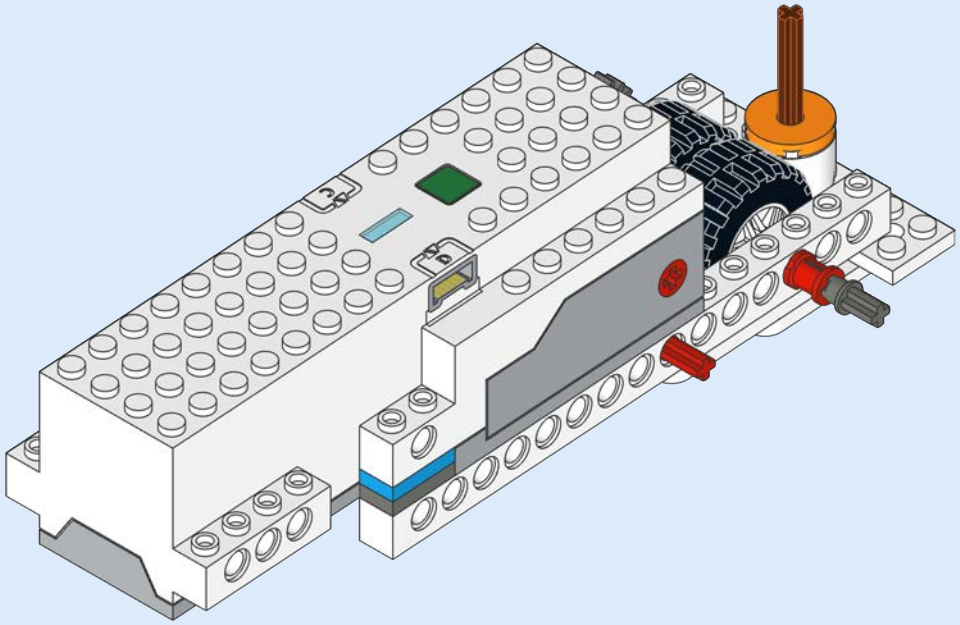

© Benedettelli 2020 - For NON-commercial use only - Please report improper use

11

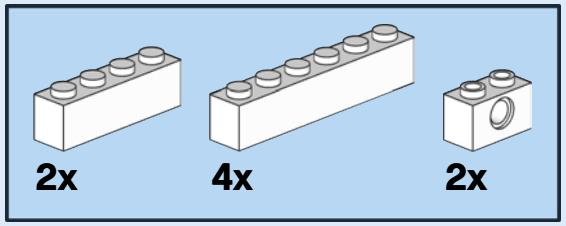

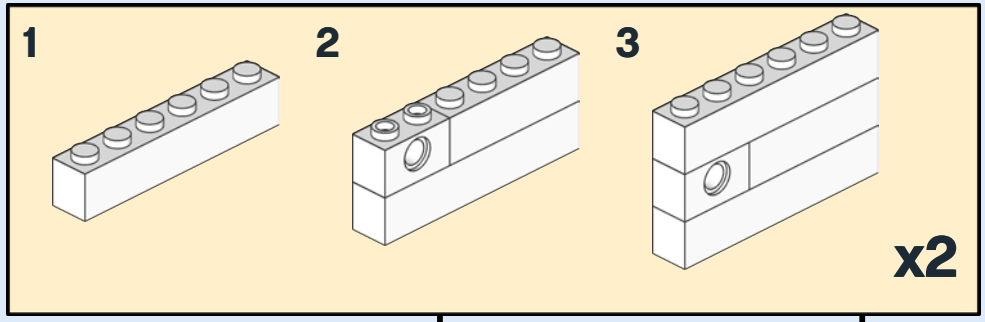

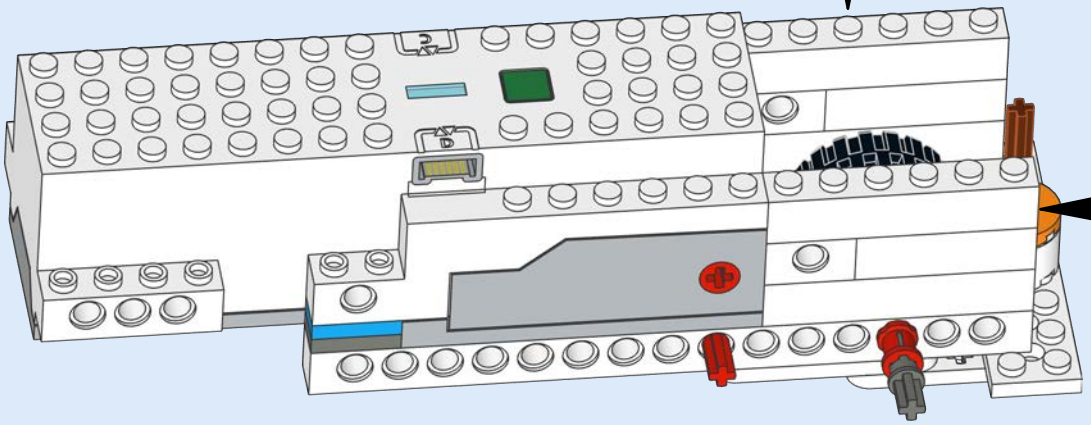

© Benedettelli 2020 - For NON-commercial use only - Please report improper use

12

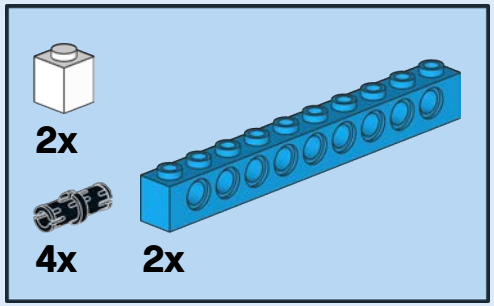

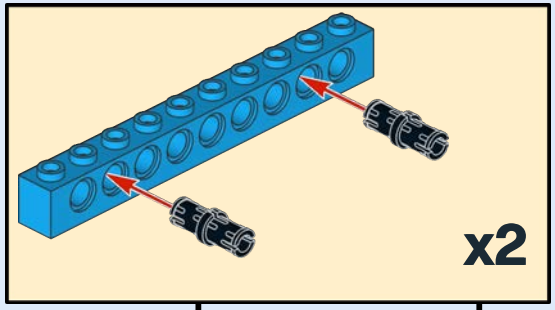

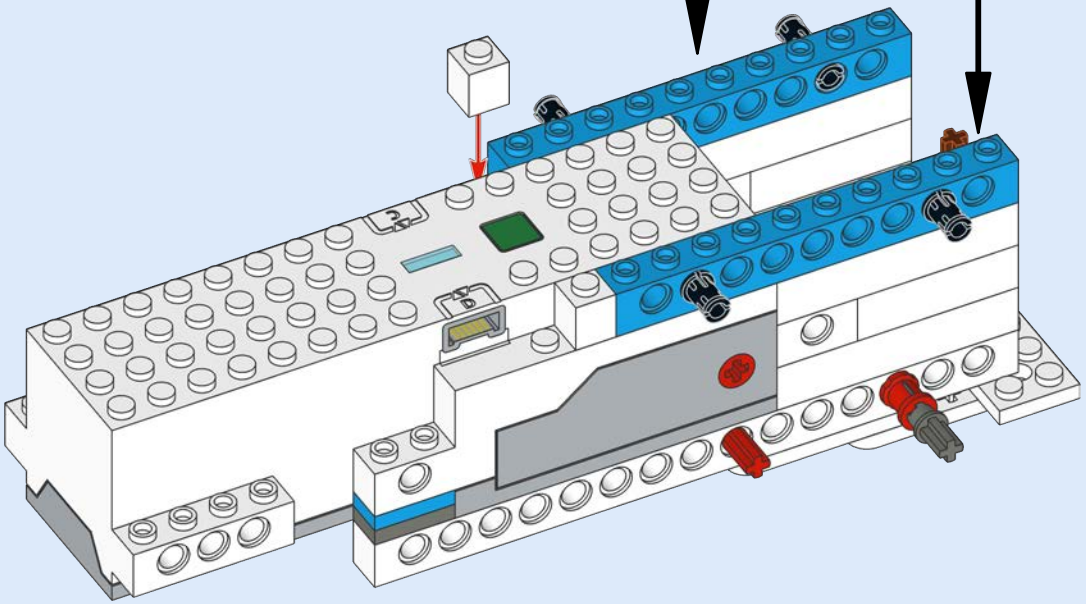

© Benedettelli 2020 - For NON-commercial use only - Please report improper use

13

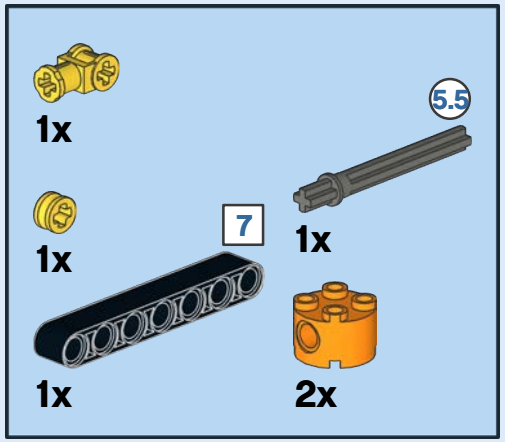

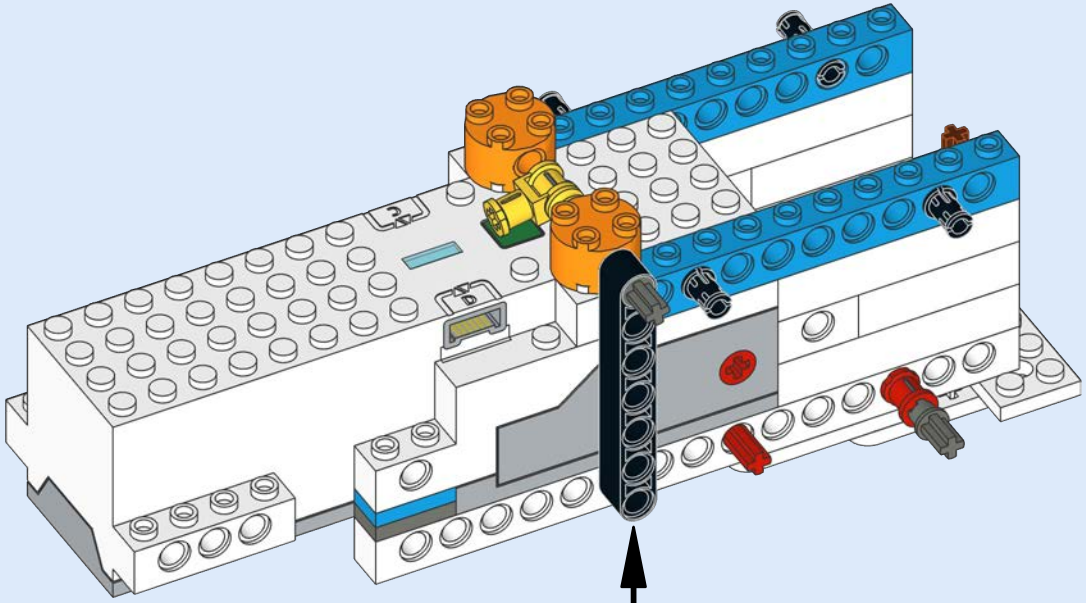

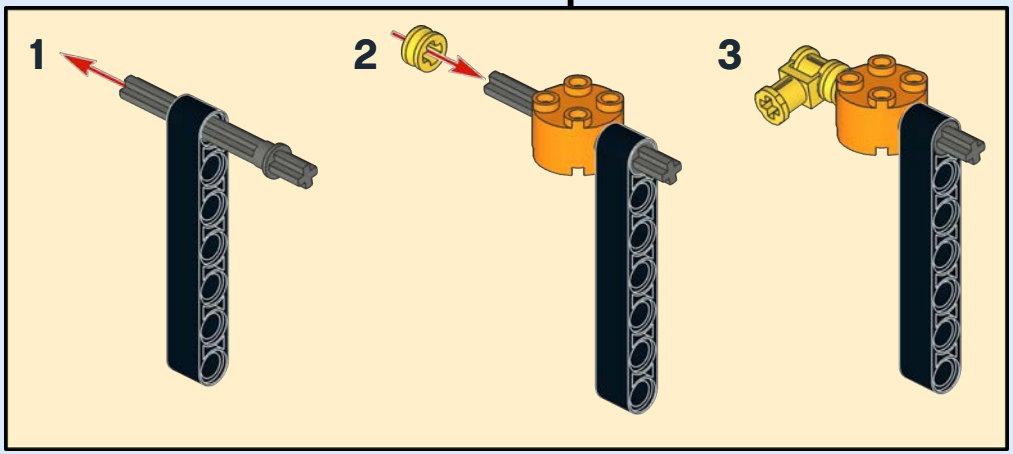

© Benedettelli 2020 - For NON-commercial use only - Please report improper use

14

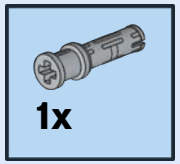

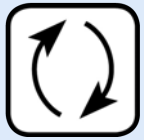

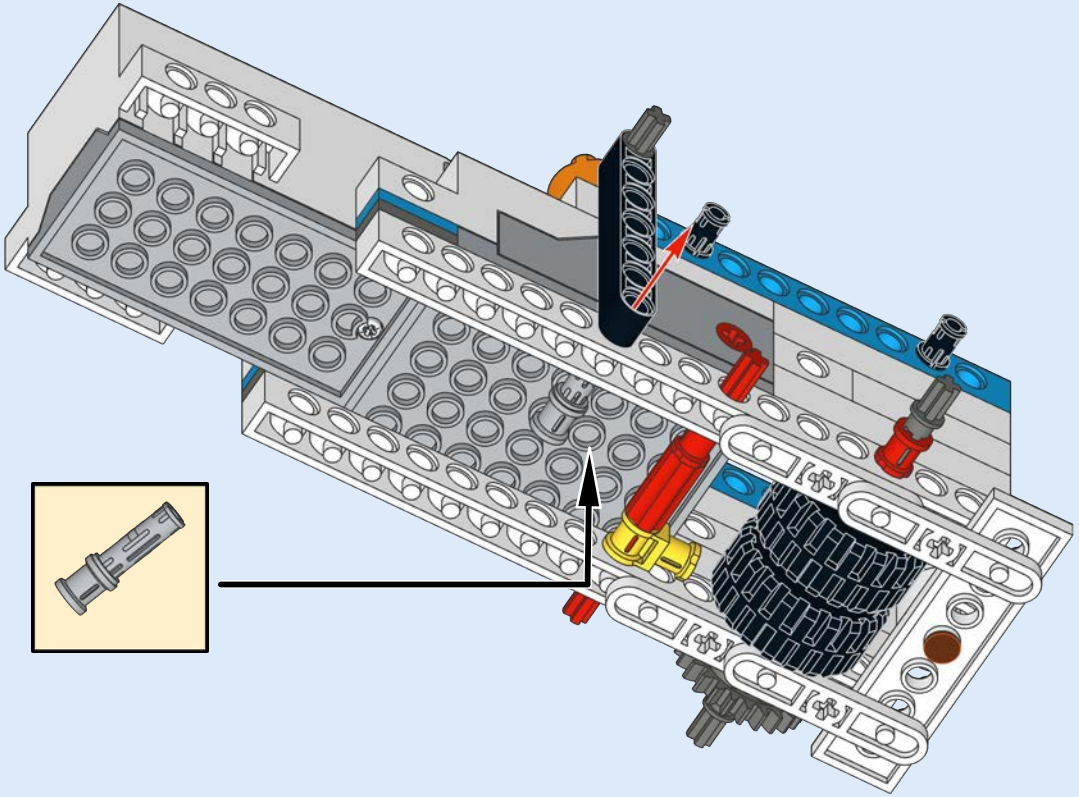

© Benedettelli 2020 - For NON-commercial use only - Please report improper use

15

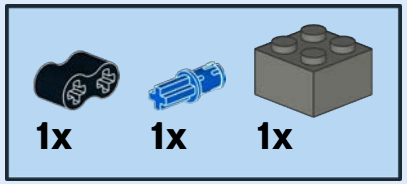

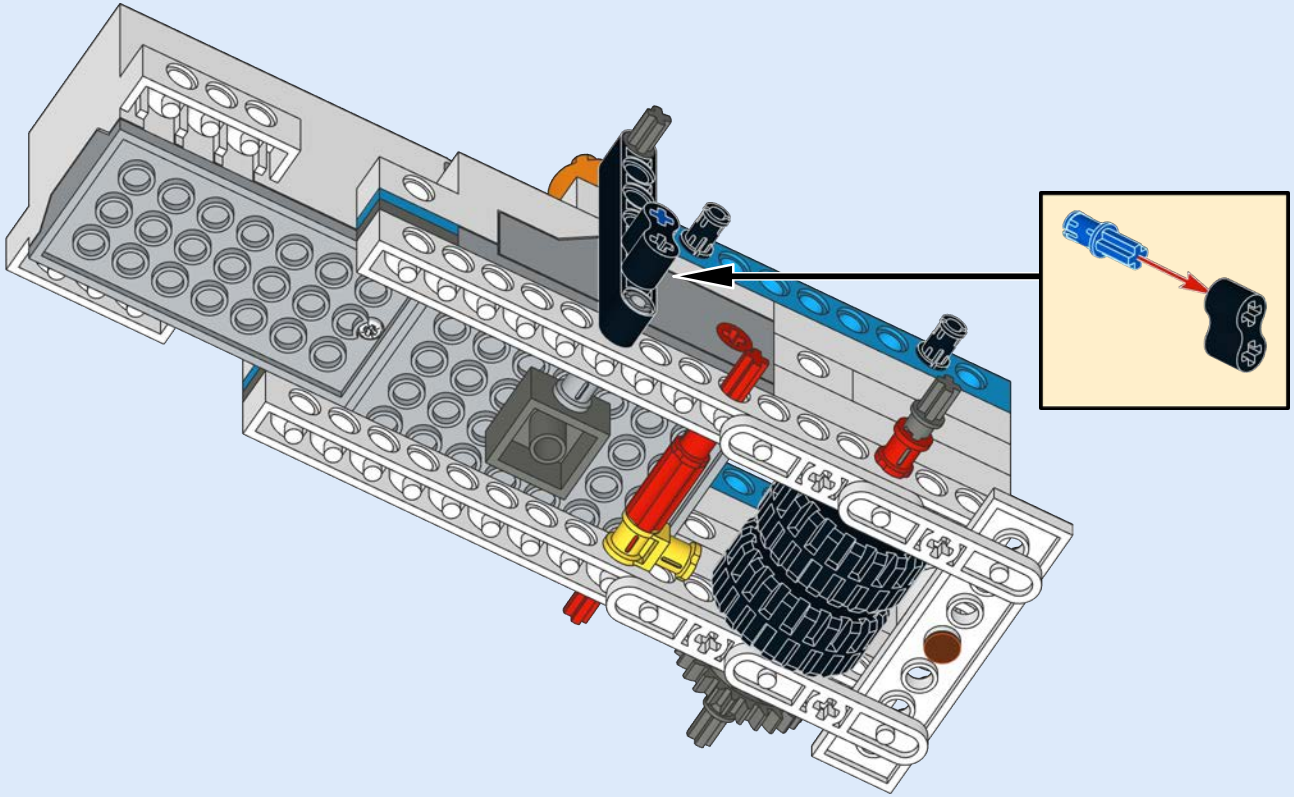

© Benedettelli 2020 - For NON-commercial use only - Please report improper use

16

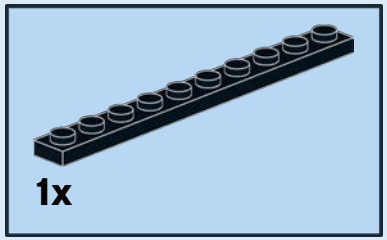

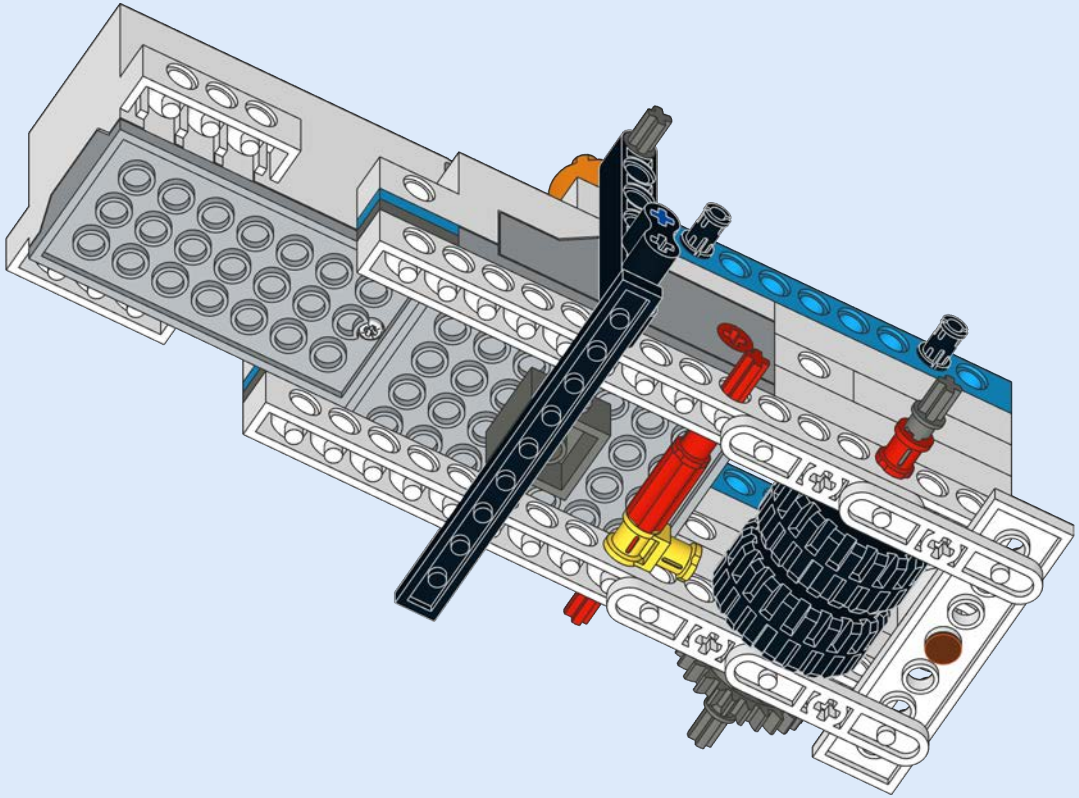

© Benedettelli 2020 - For NON-commercial use only - Please report improper use

17

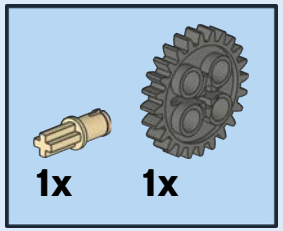

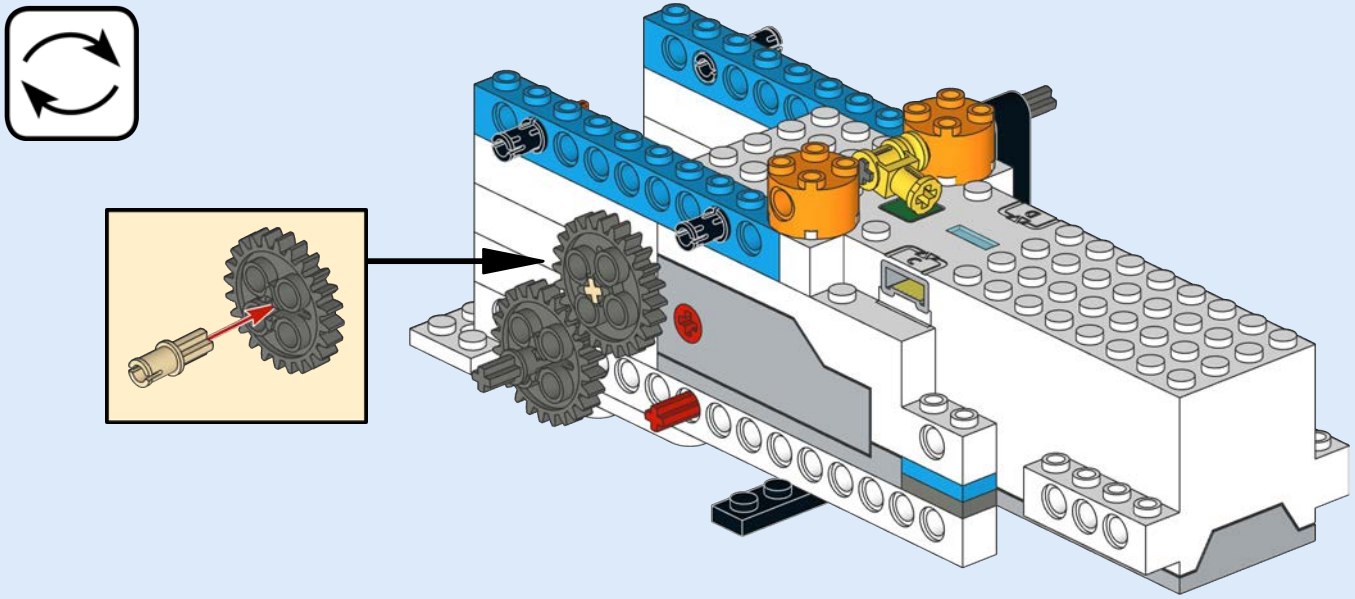

© Benedettelli 2020 - For NON-commercial use only - Please report improper use

18

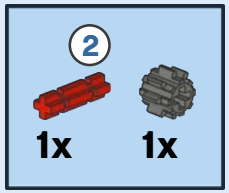

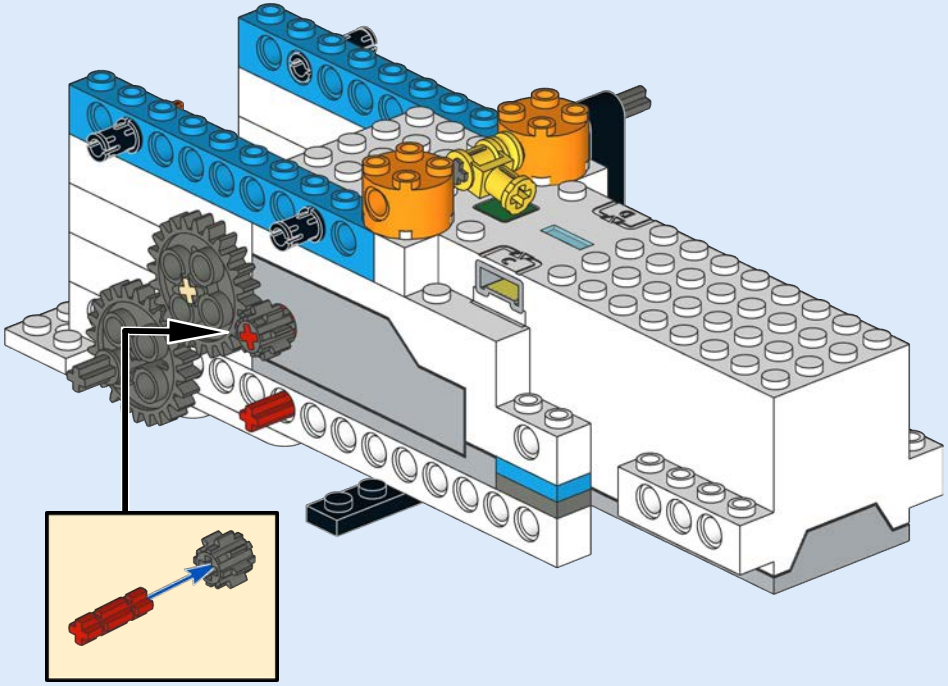

© Benedettelli 2020 - For NON-commercial use only - Please report improper use

19

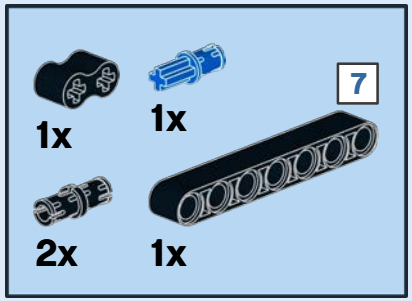

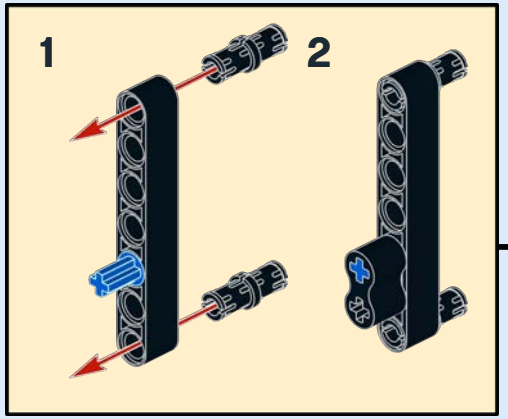

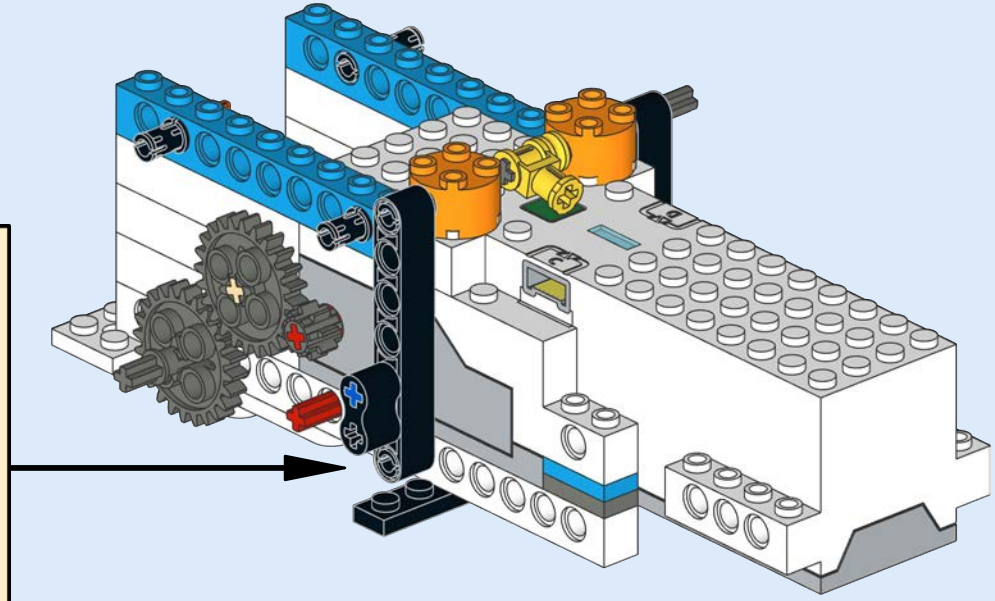

© Benedettelli 2020 - For NON-commercial use only - Please report improper use

20

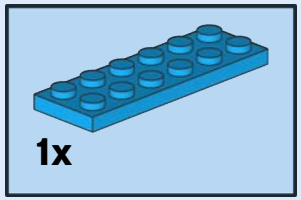

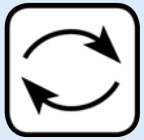

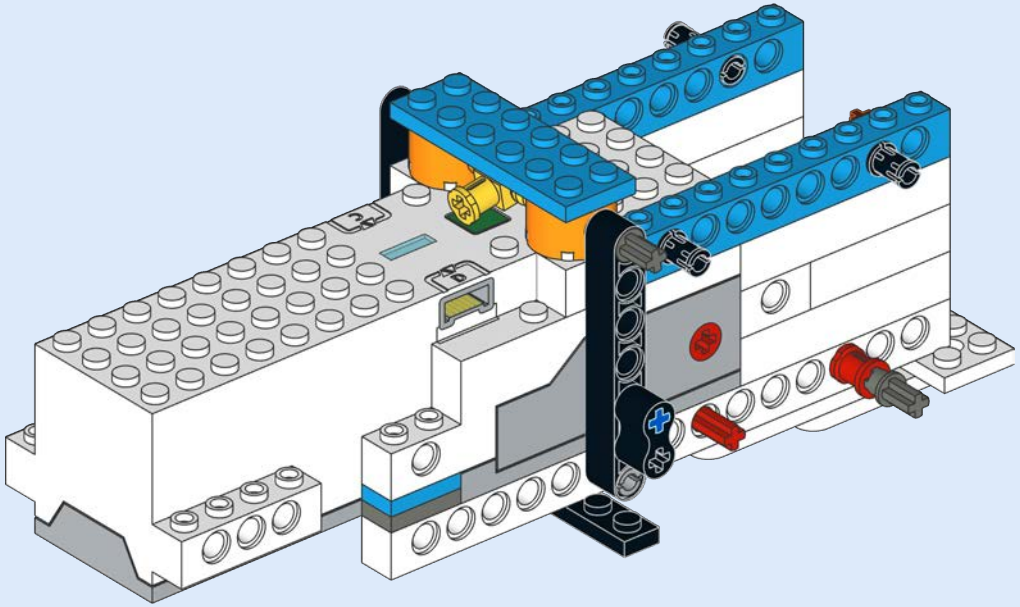

© Benedettelli 2020 - For NON-commercial use only - Please report improper use

21

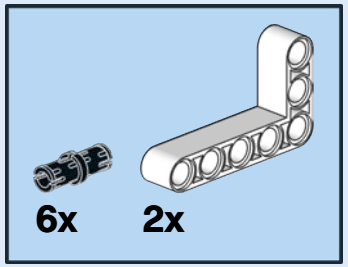

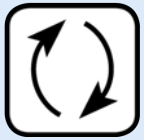

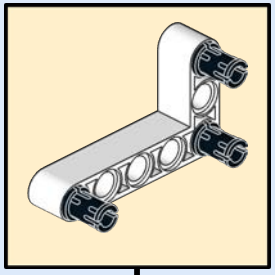

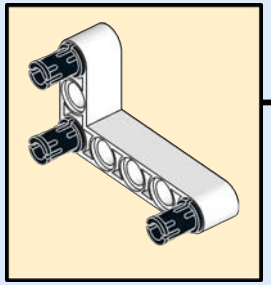

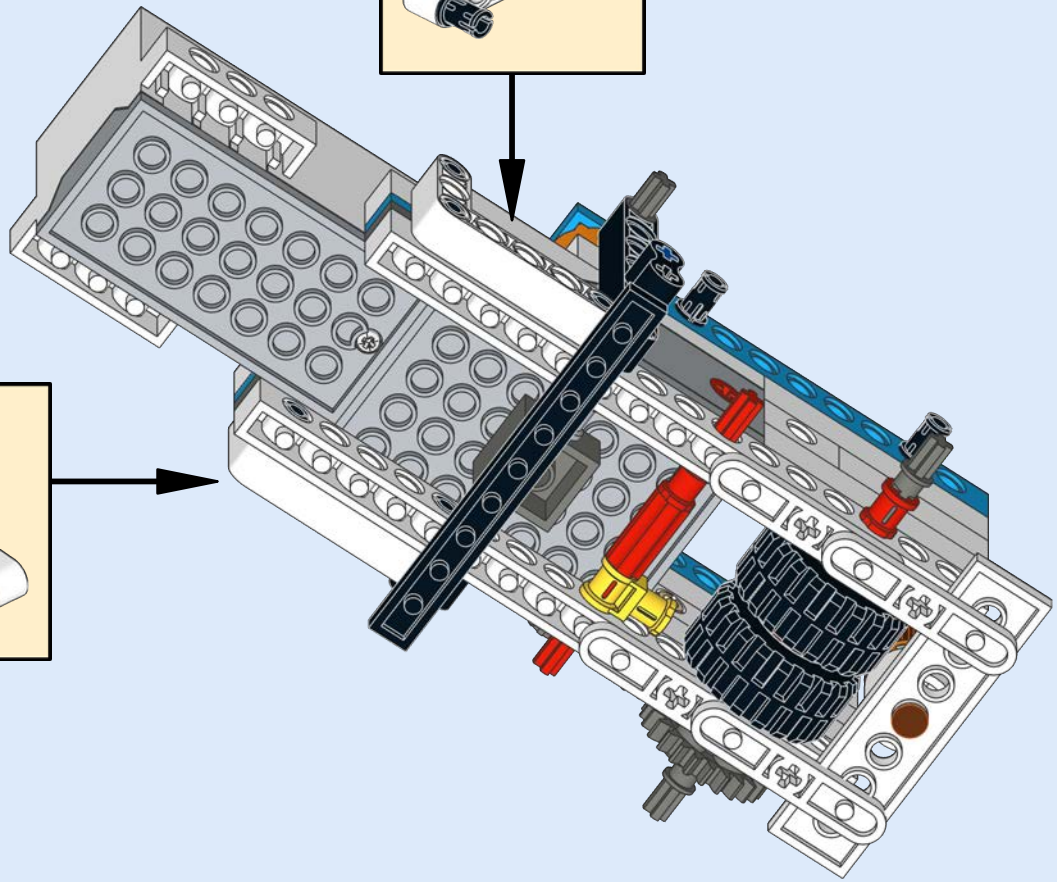

© Benedettelli 2020 - For NON-commercial use only - Please report improper use

22

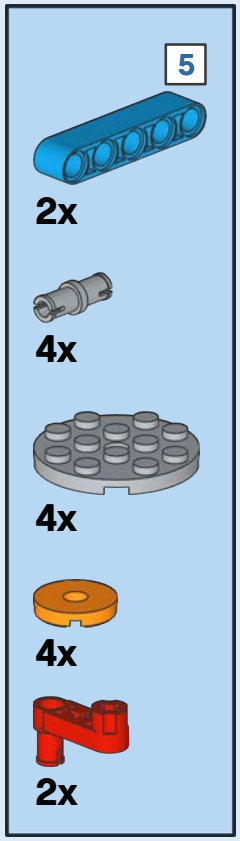

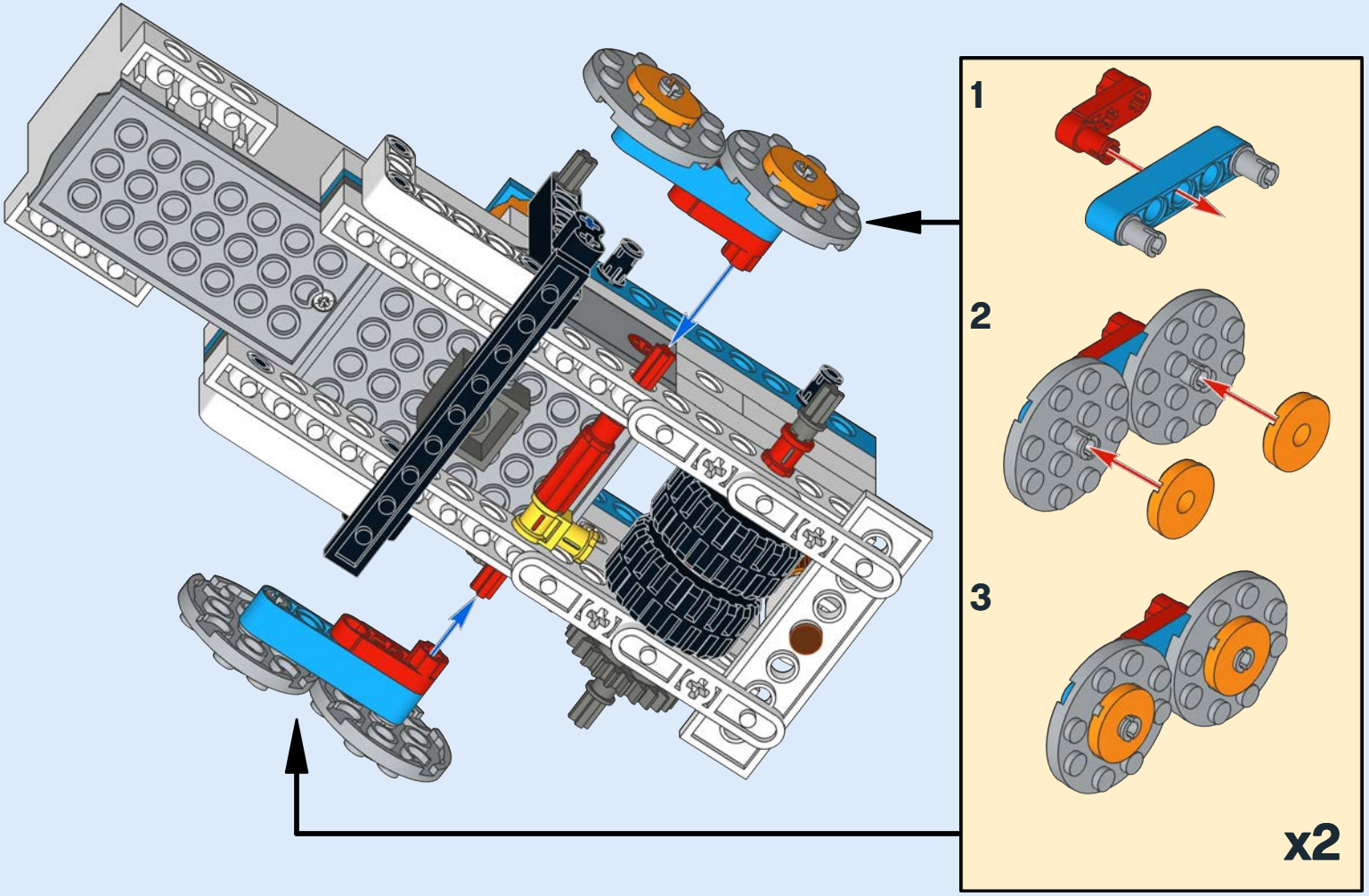

© Benedettelli 2020 - For NON-commercial use only - Please report improper use

23

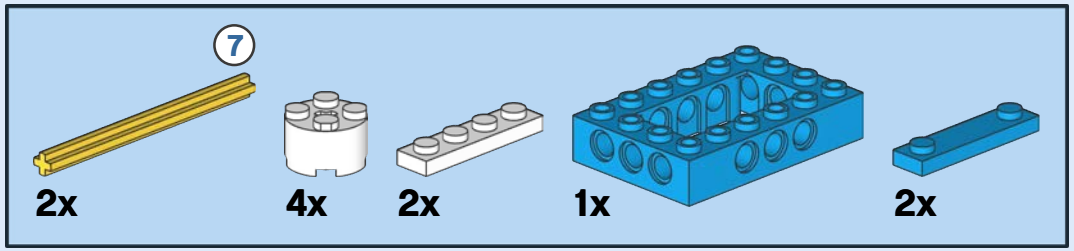

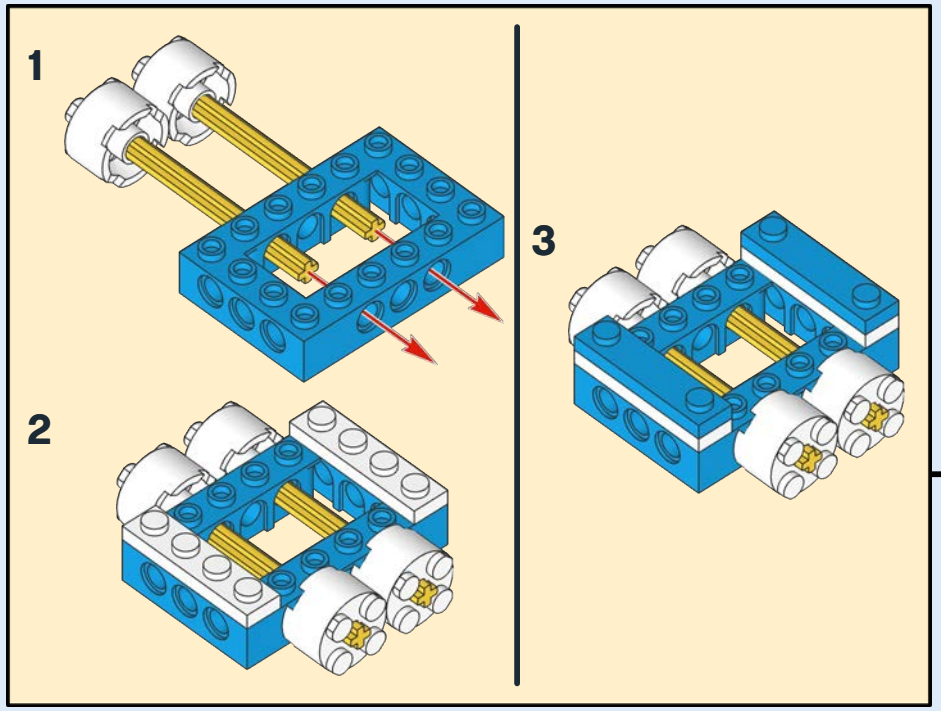

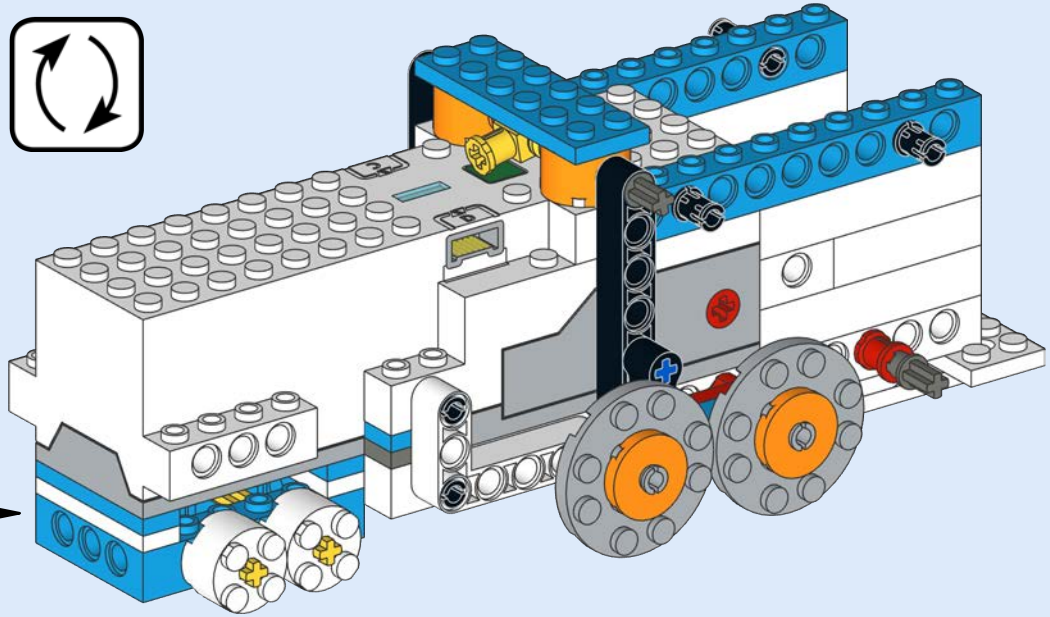

Stage 1 is complete.

© Benedettelli 2020 - For NON-commercial use only - Please report improper use

24

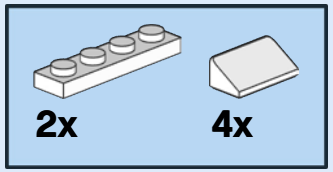

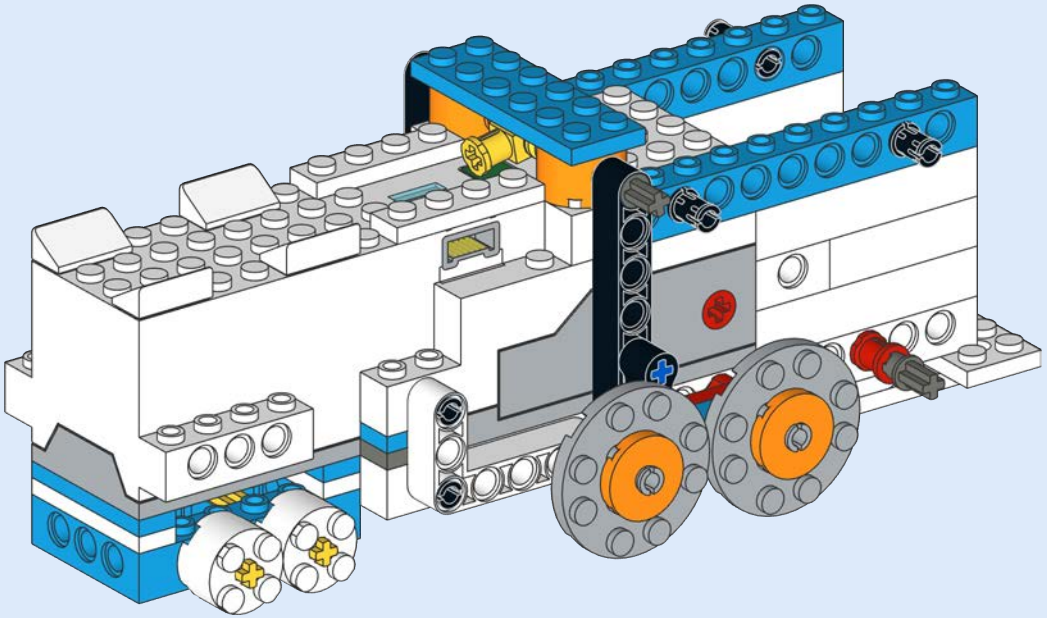

© Benedettelli 2020 - For NON-commercial use only - Please report improper use

25

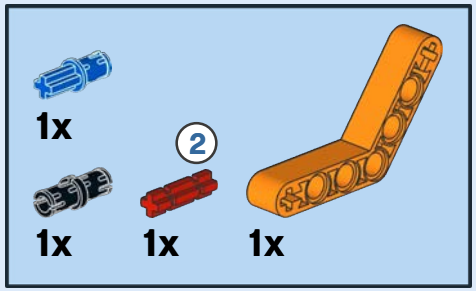

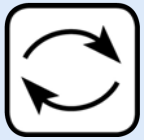

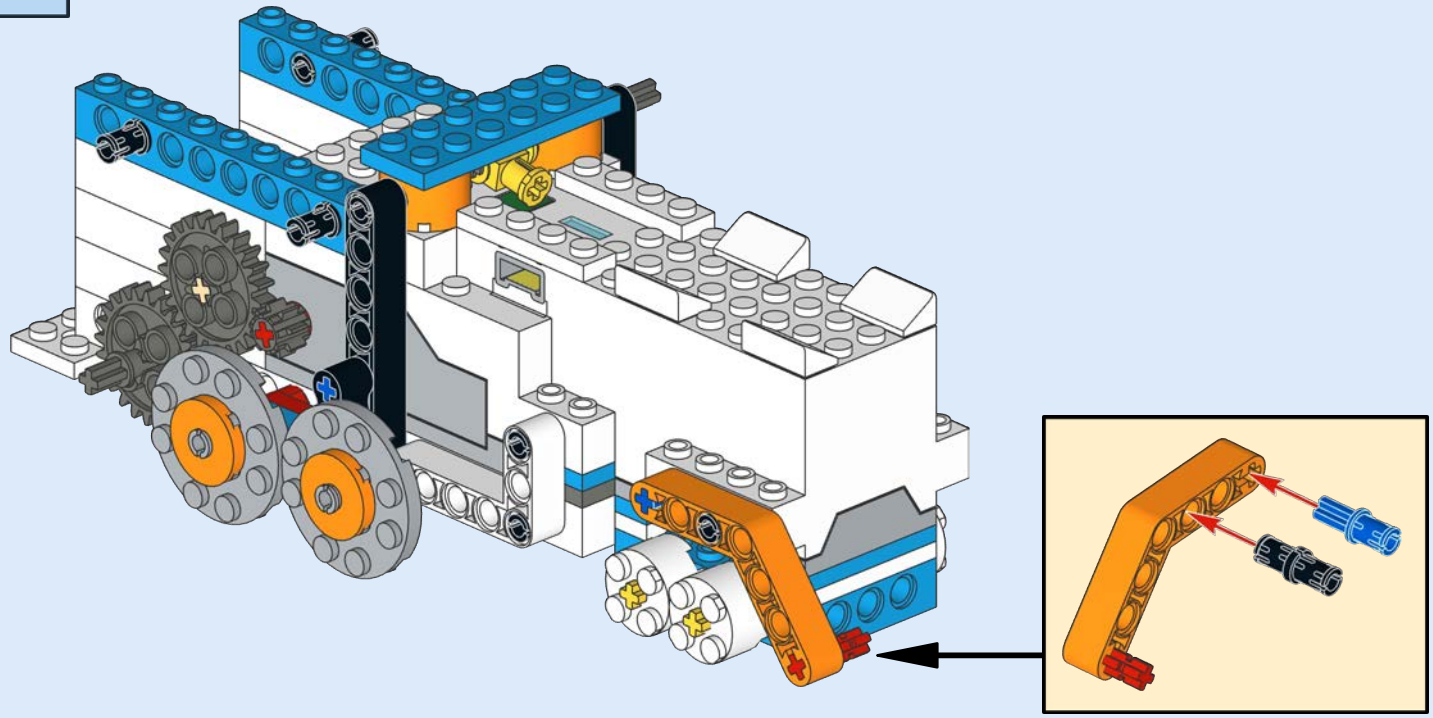

© Benedettelli 2020 - For NON-commercial use only - Please report improper use

26

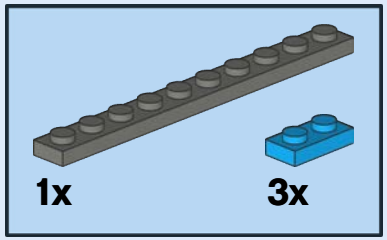

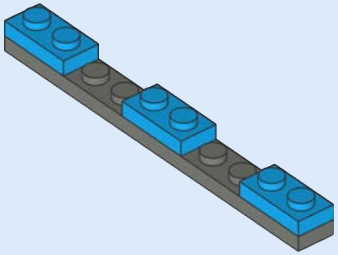

© Benedettelli 2020 - For NON-commercial use only - Please report improper use

27

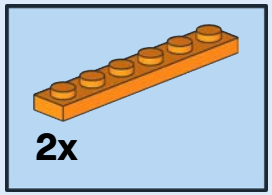

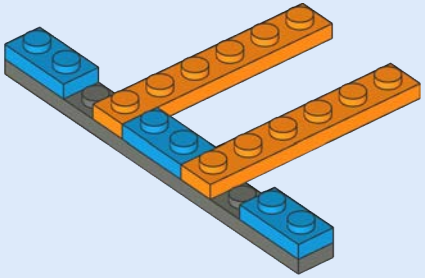

© Benedettelli 2020 - For NON-commercial use only - Please report improper use

28

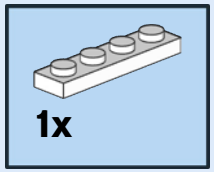

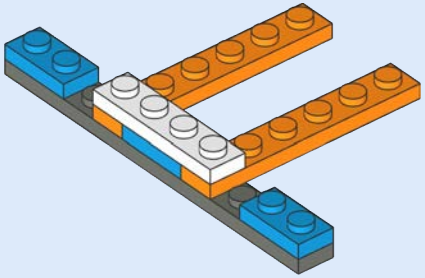

© Benedettelli 2020 - For NON-commercial use only - Please report improper use

29

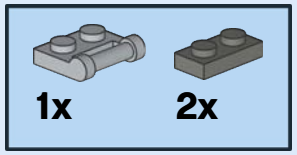

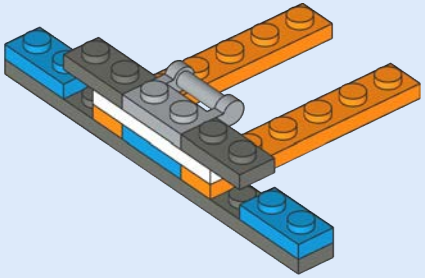

© Benedettelli 2020 - For NON-commercial use only - Please report improper use

30

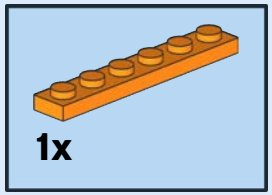

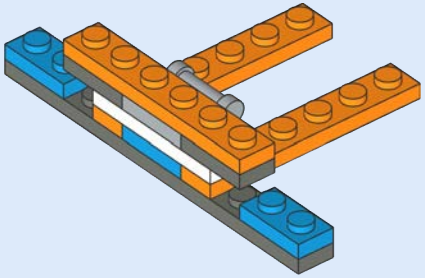

© Benedettelli 2020 - For NON-commercial use only - Please report improper use

31

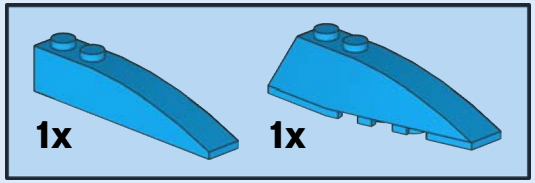

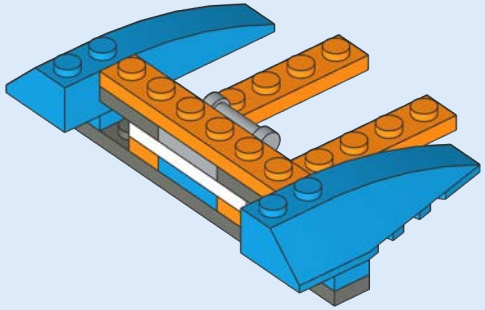

© Benedettelli 2020 - For NON-commercial use only - Please report improper use

32

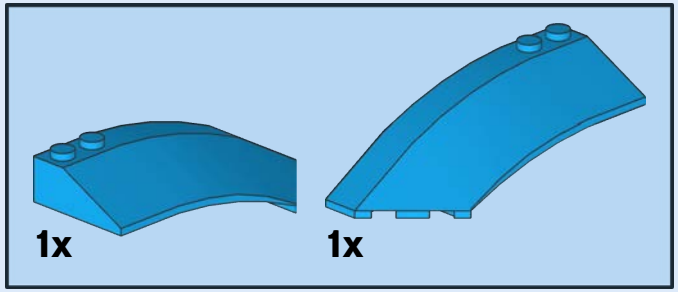

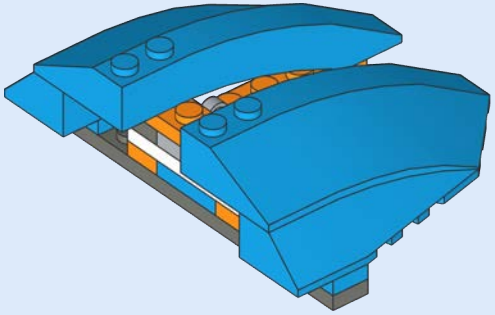

© Benedettelli 2020 - For NON-commercial use only - Please report improper use

33

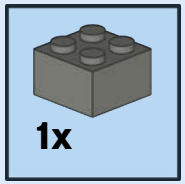

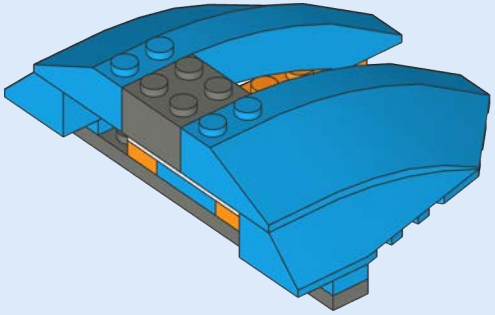

© Benedettelli 2020 - For NON-commercial use only - Please report improper use

34

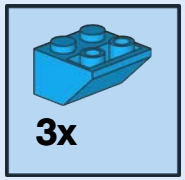

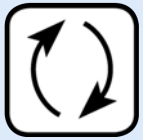

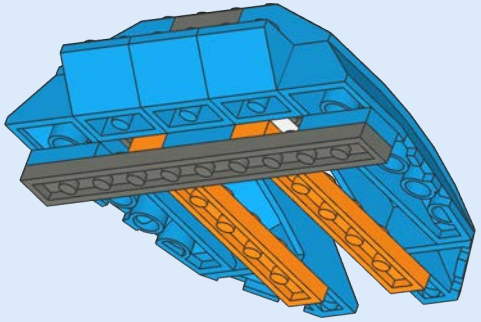

© Benedettelli 2020 - For NON-commercial use only - Please report improper use

35

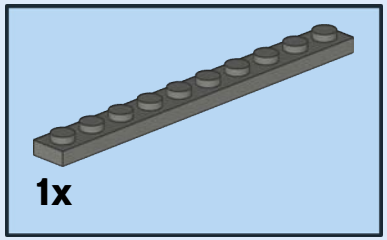

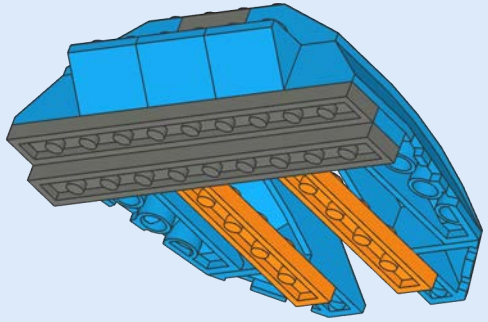

© Benedettelli 2020 - For NON-commercial use only - Please report improper use

36

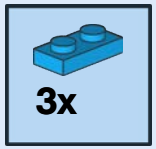

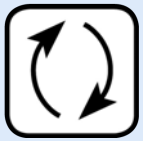

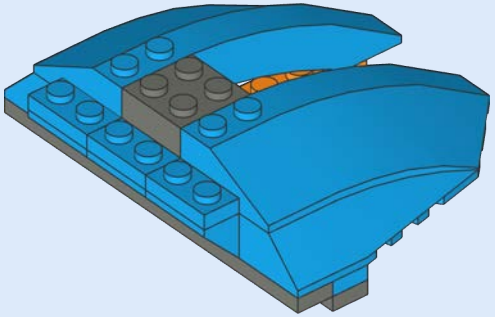

© Benedettelli 2020 - For NON-commercial use only - Please report improper use

37

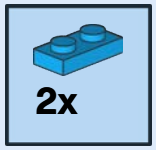

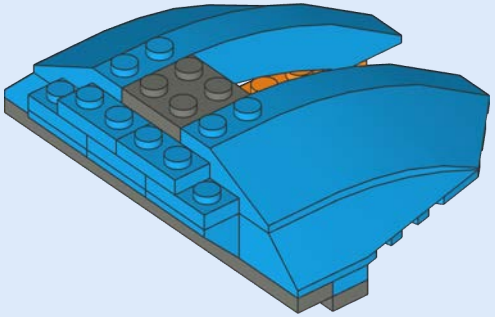

© Benedettelli 2020 - For NON-commercial use only - Please report improper use

38

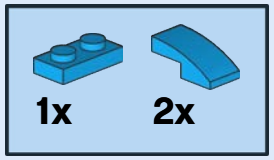

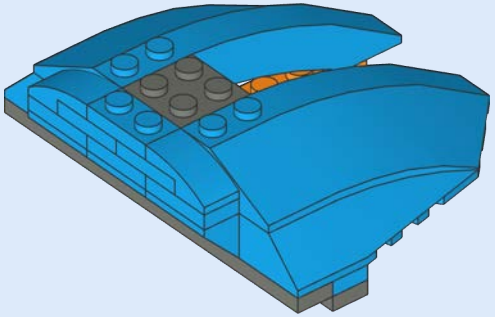

© Benedettelli 2020 - For NON-commercial use only - Please report improper use

39

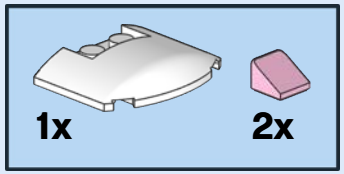

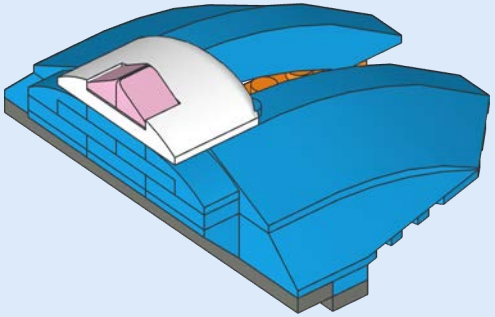

© Benedettelli 2020 - For NON-commercial use only - Please report improper use

40

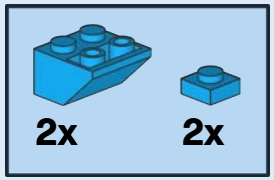

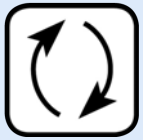

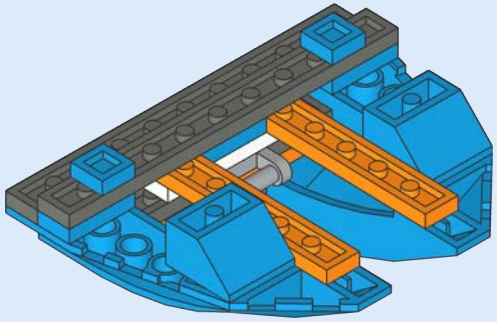

© Benedettelli 2020 - For NON-commercial use only - Please report improper use

41

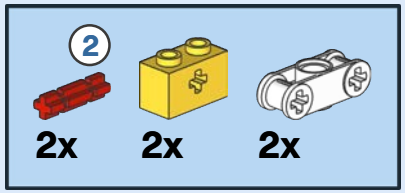

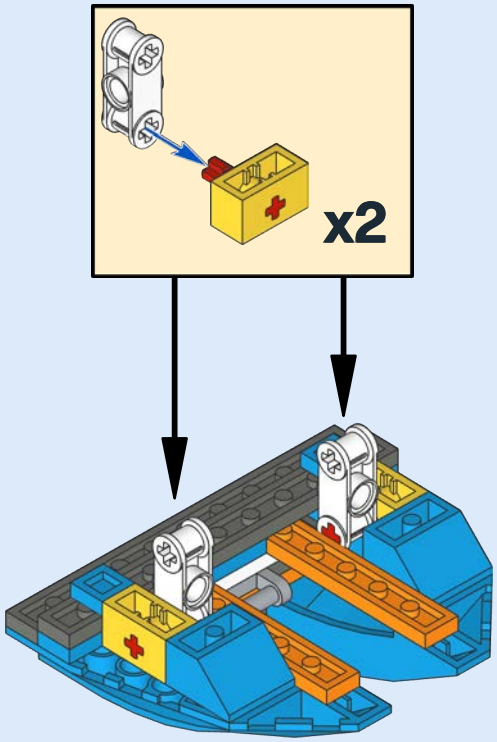

© Benedettelli 2020 - For NON-commercial use only - Please report improper use

42

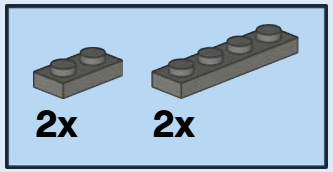

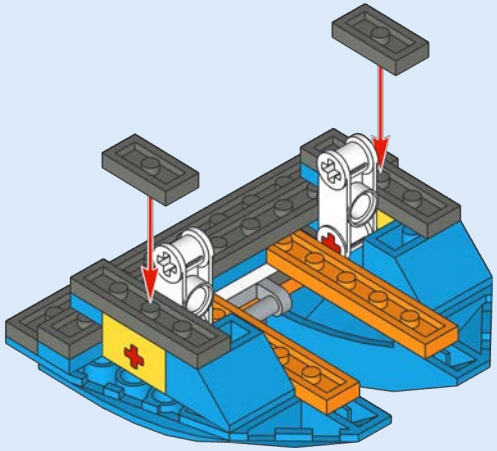

© Benedettelli 2020 - For NON-commercial use only - Please report improper use

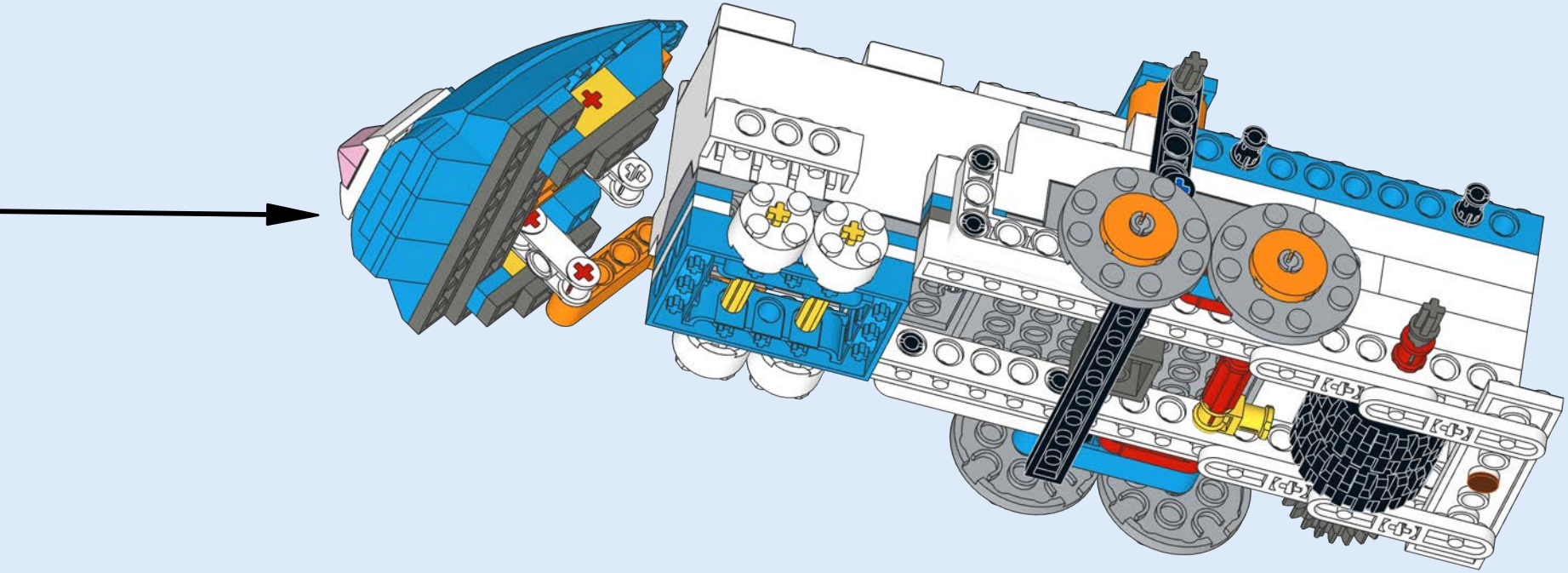

© Benedettelli 2020 - For NON-commercial use only - Please report improper use

44

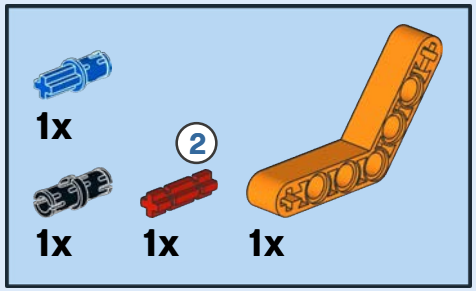

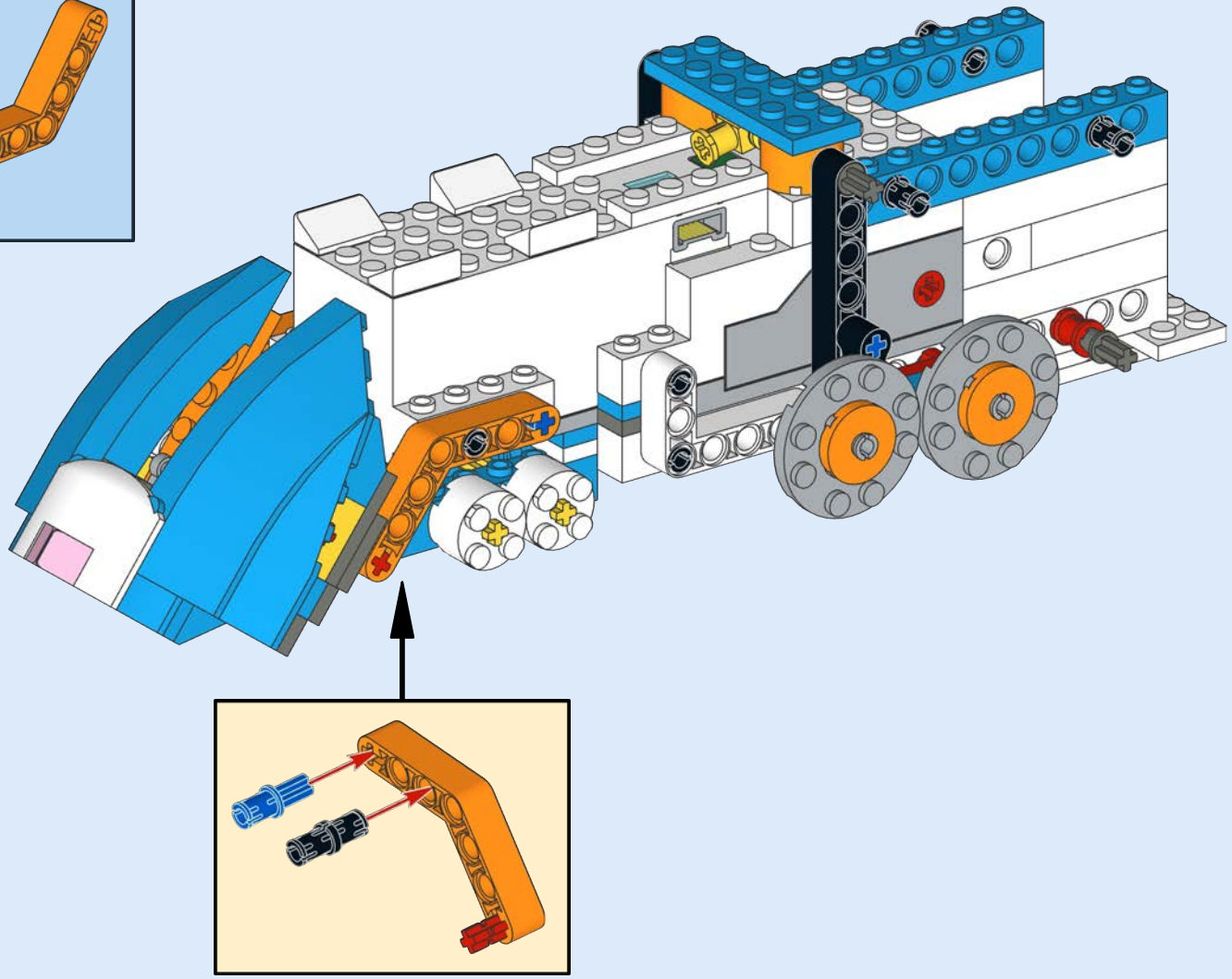

© Benedettelli 2020 - For NON-commercial use only - Please report improper use

45

1

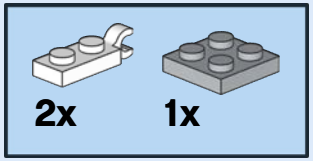

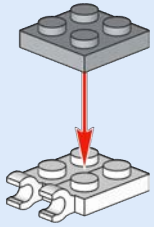

2

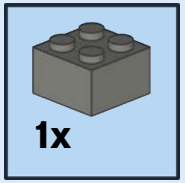

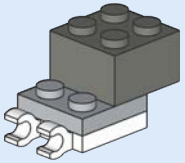

3

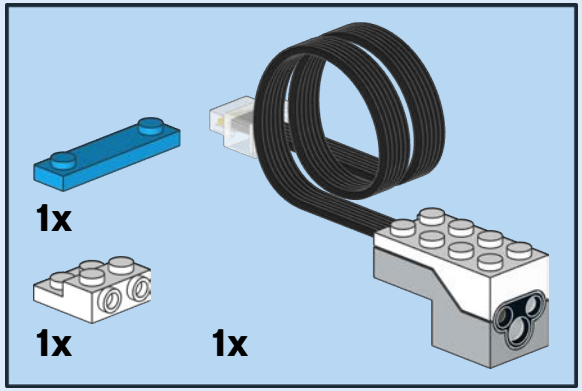

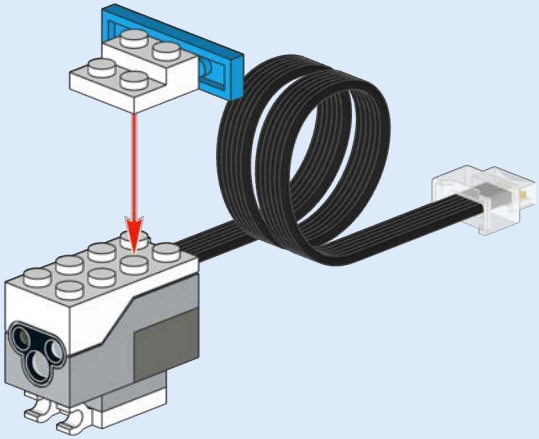

4

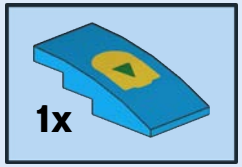

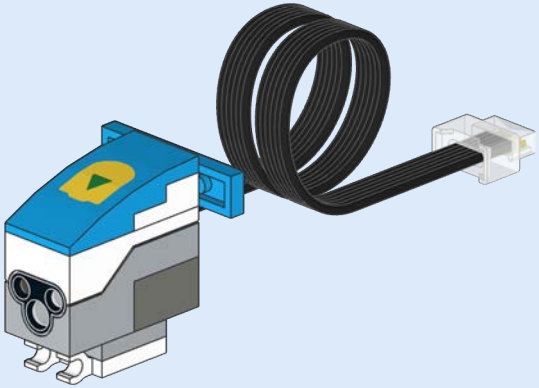

© Benedettelli 2020 - For NON-commercial use only - Please report improper use

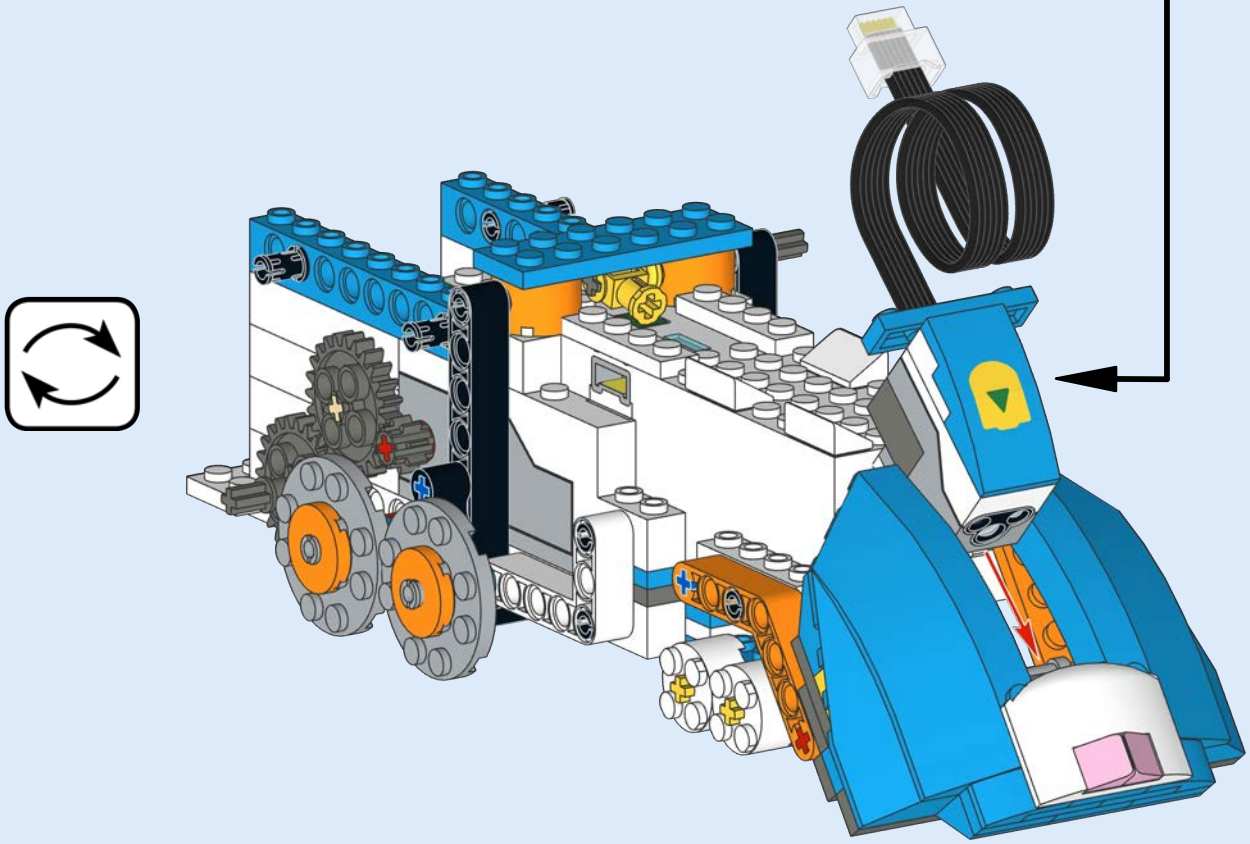

© Benedettelli 2020 - For NON-commercial use only - Please report improper use

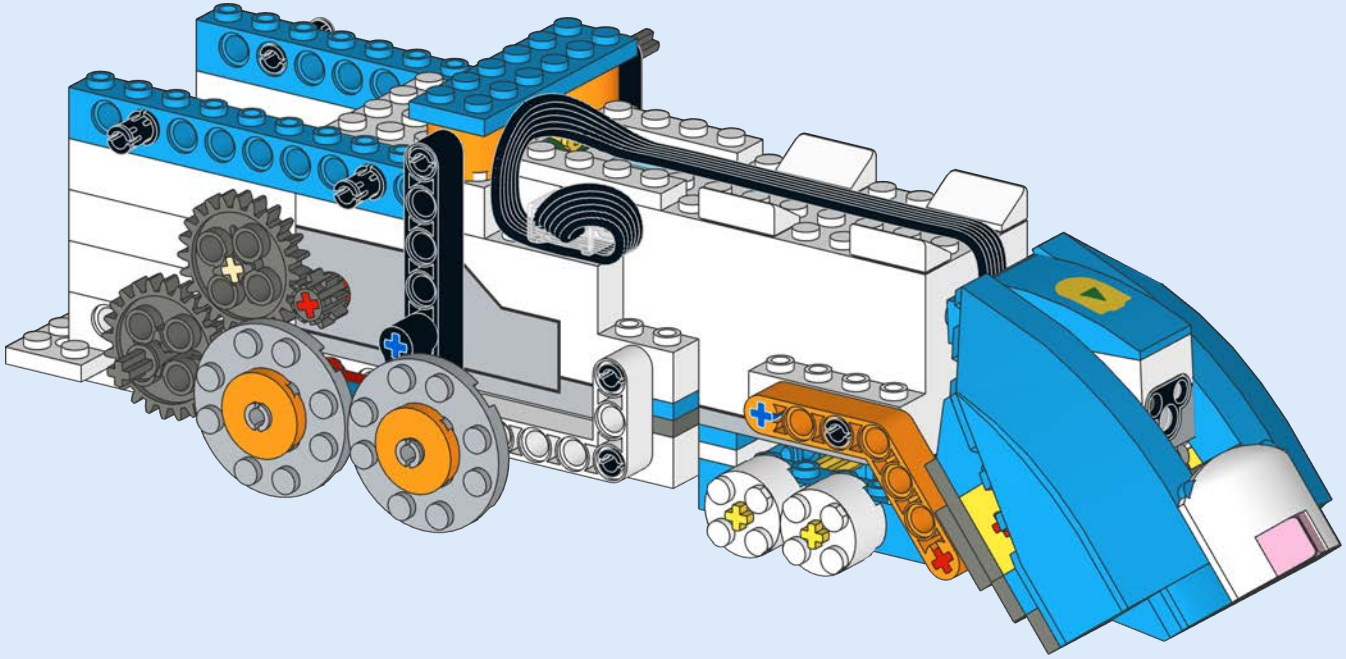

Stage 2 is complete.

© Benedettelli 2020 - For NON-commercial use only - Please report improper use

48

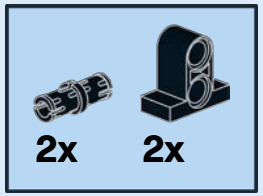

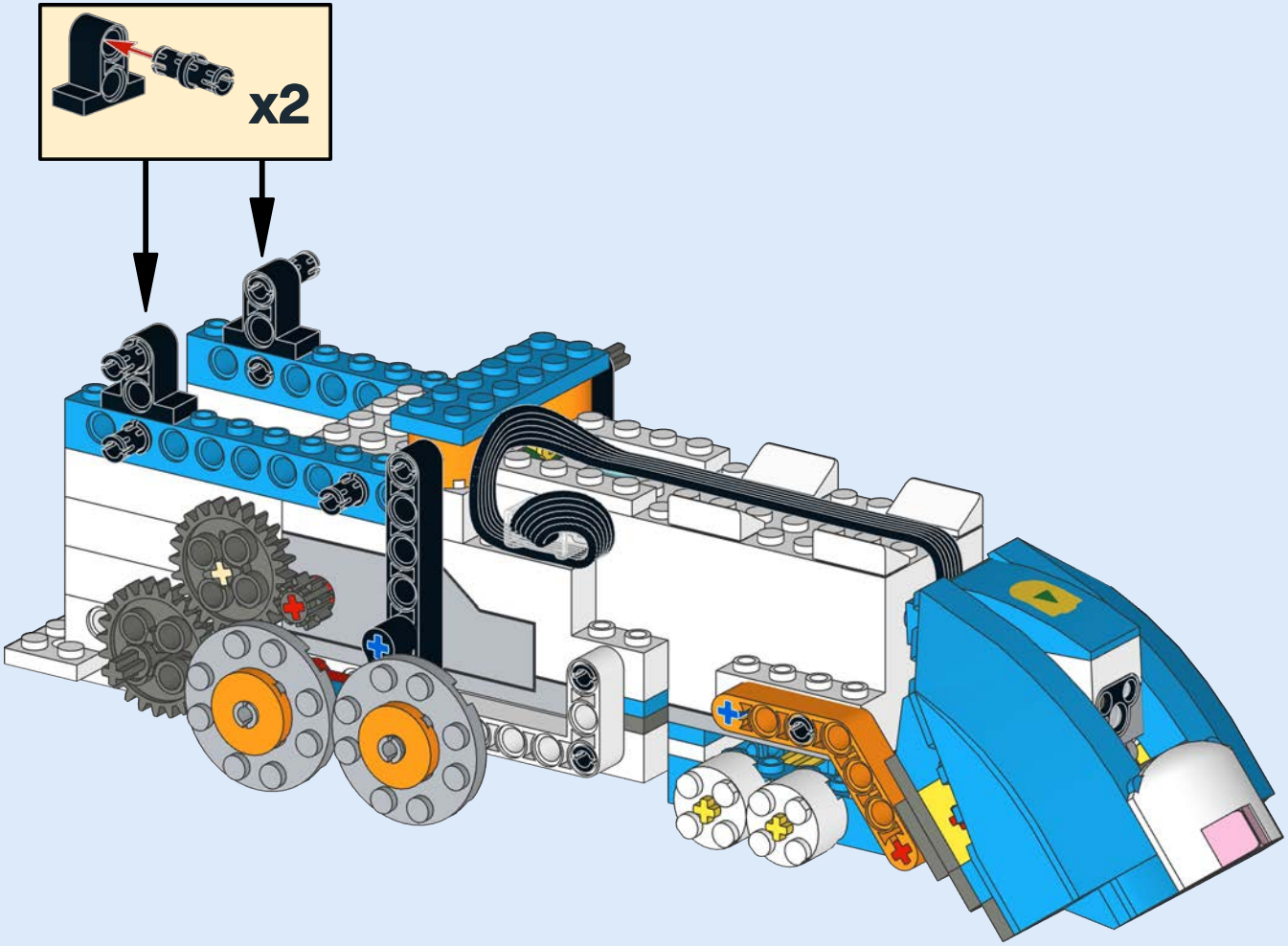

© Benedettelli 2020 - For NON-commercial use only - Please report improper use

49

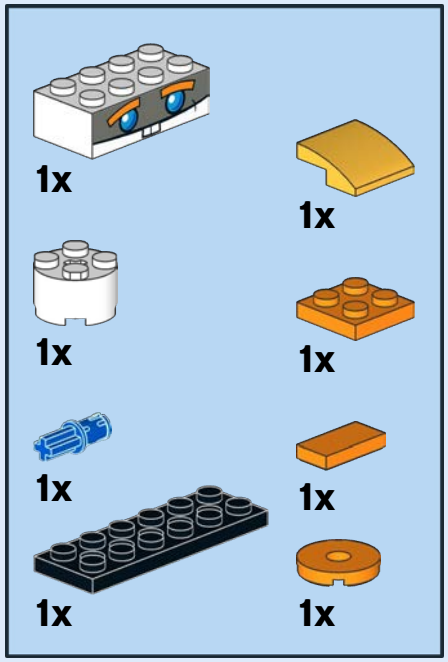

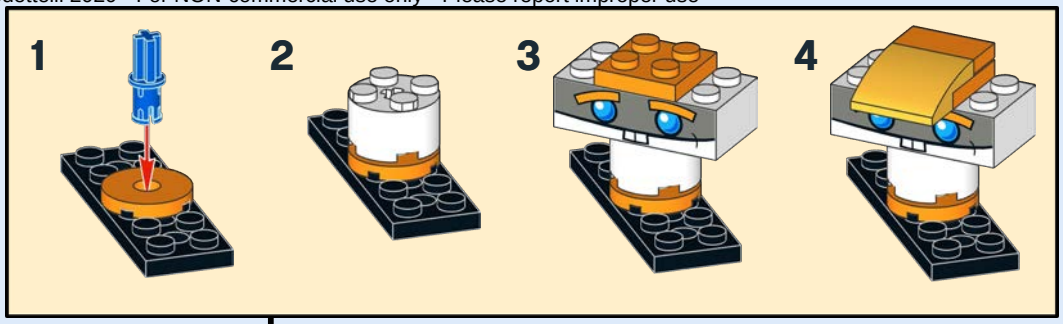

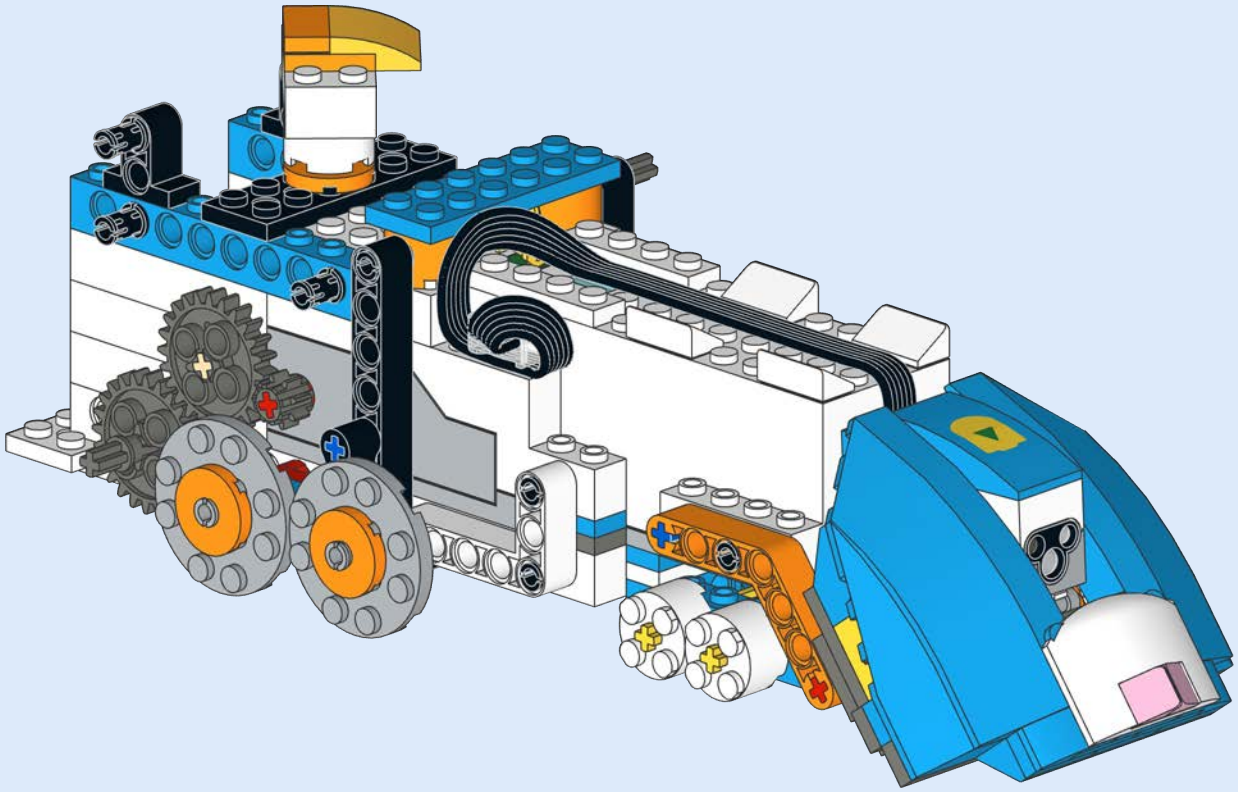

© Benedettelli 2020 - For NON-commercial use only - Please report improper use

50

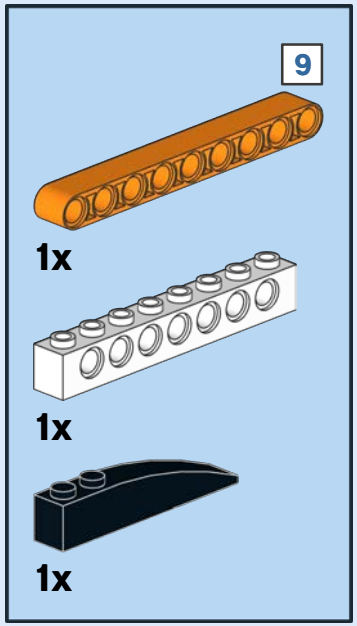

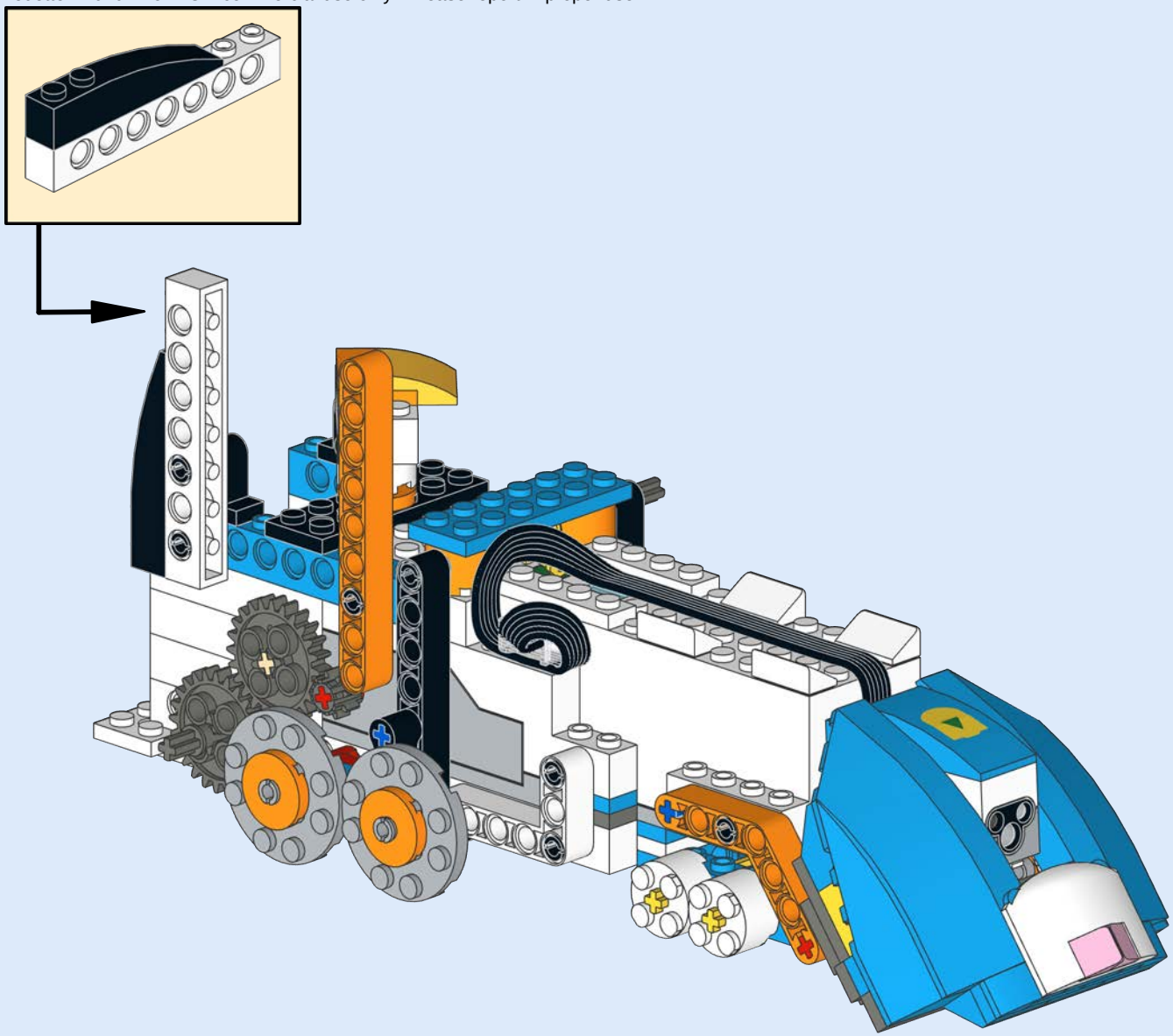

© Benedettelli 2020 - For NON-commercial use only - Please report improper use

51

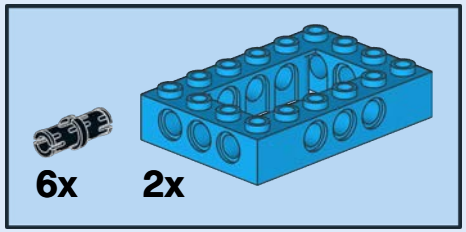

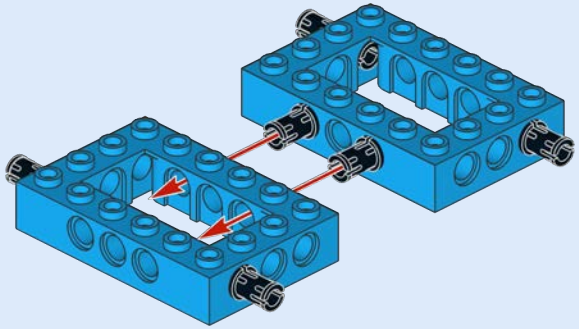

© Benedettelli 2020 - For NON-commercial use only - Please report improper use

52

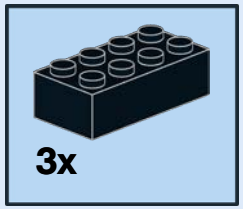

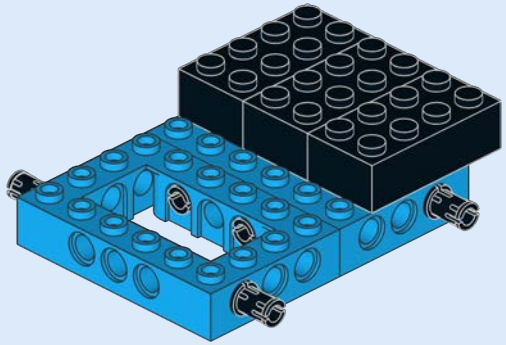

© Benedettelli 2020 - For NON-commercial use only - Please report improper use

53

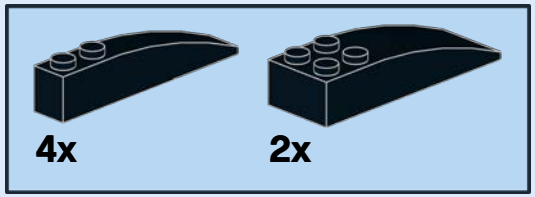

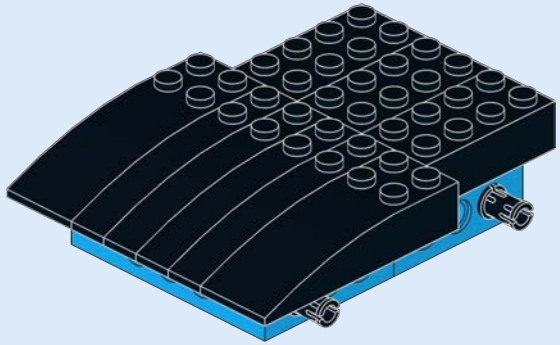

© Benedettelli 2020 - For NON-commercial use only - Please report improper use

54

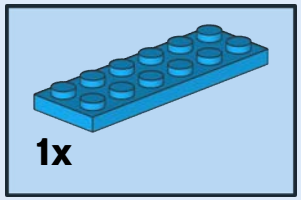

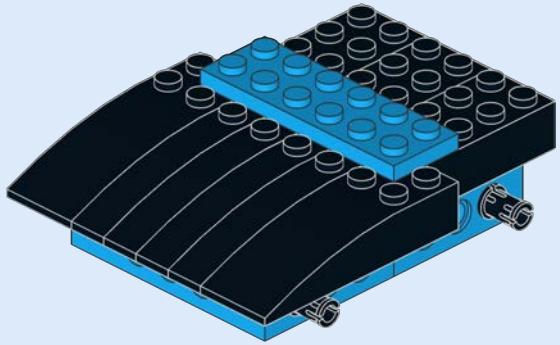

© Benedettelli 2020 - For NON-commercial use only - Please report improper use

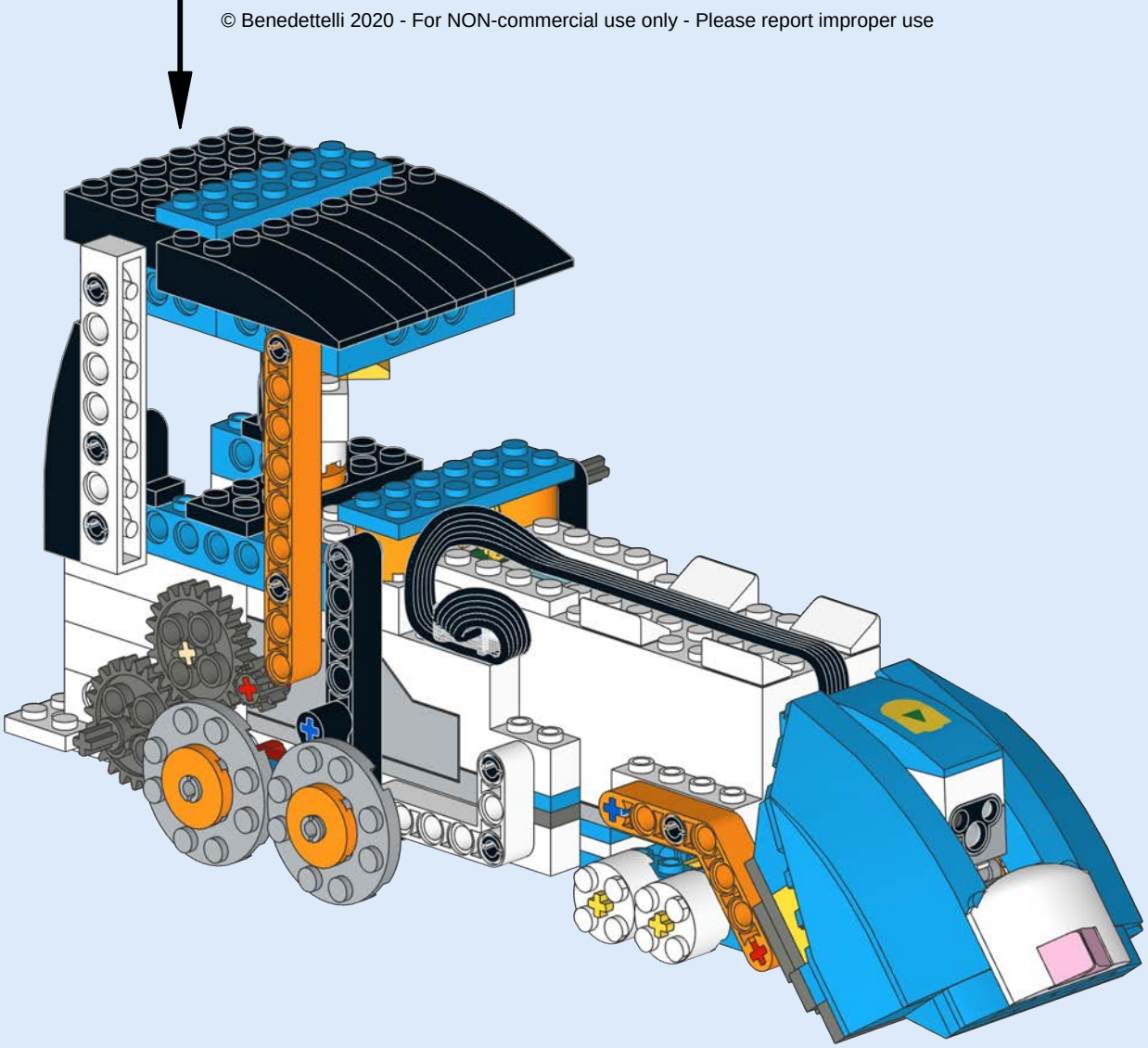

© Benedettelli 2020 - For NON-commercial use only - Please report improper use

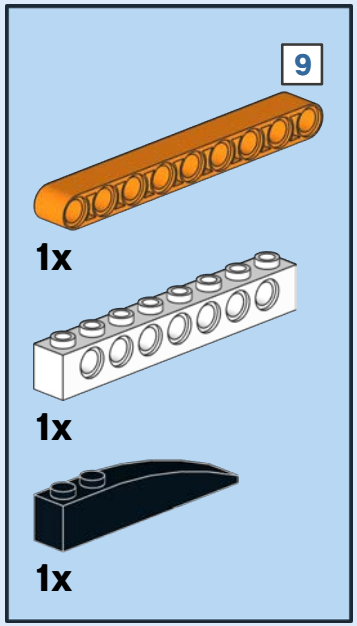

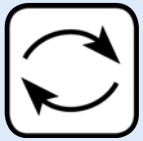

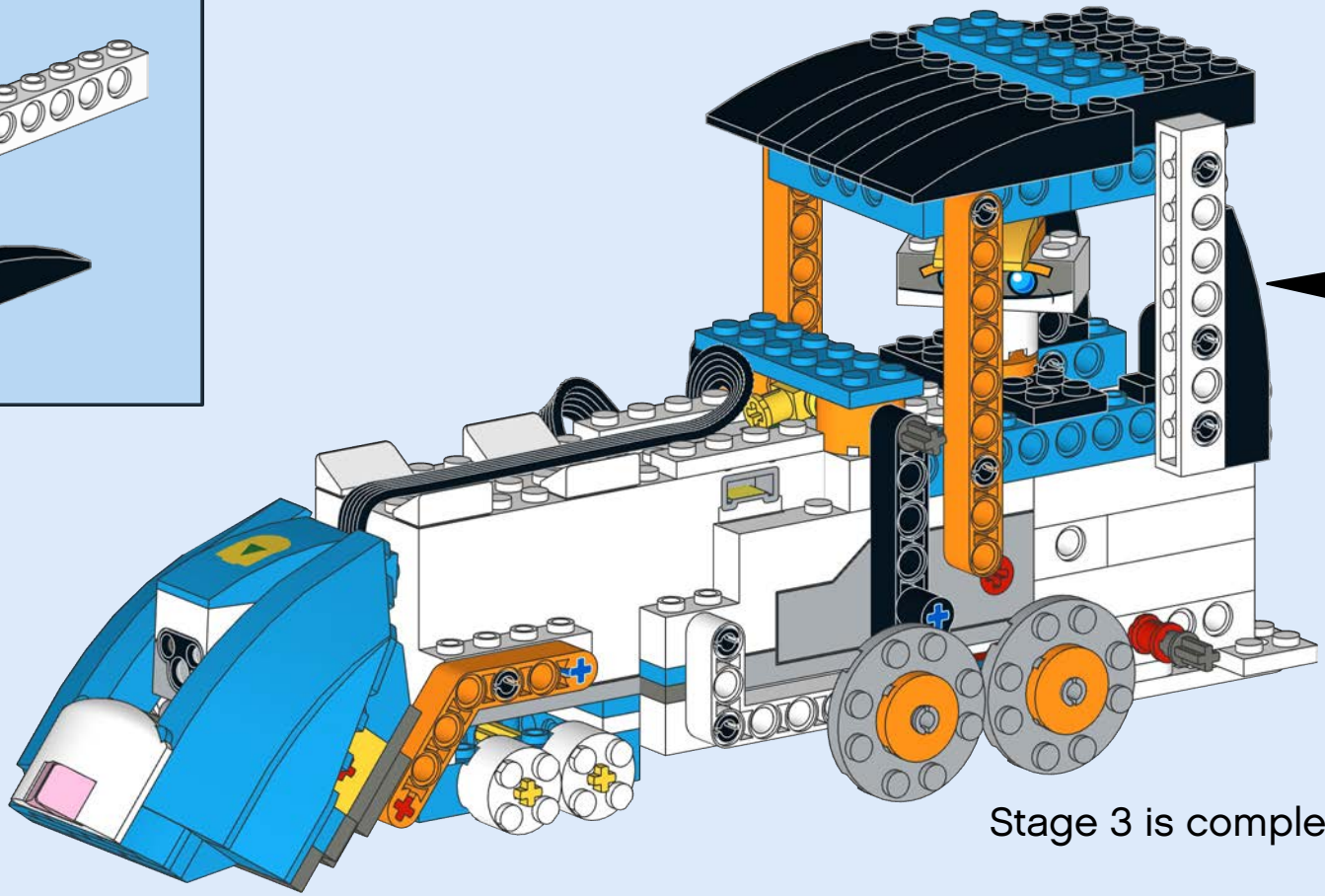

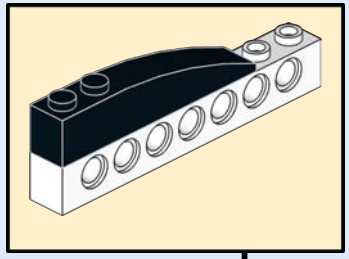

Stage 3 is complete.

© Benedettelli 2020 - For NON-commercial use only - Please report improper use

57

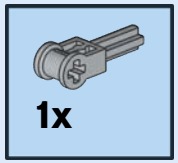

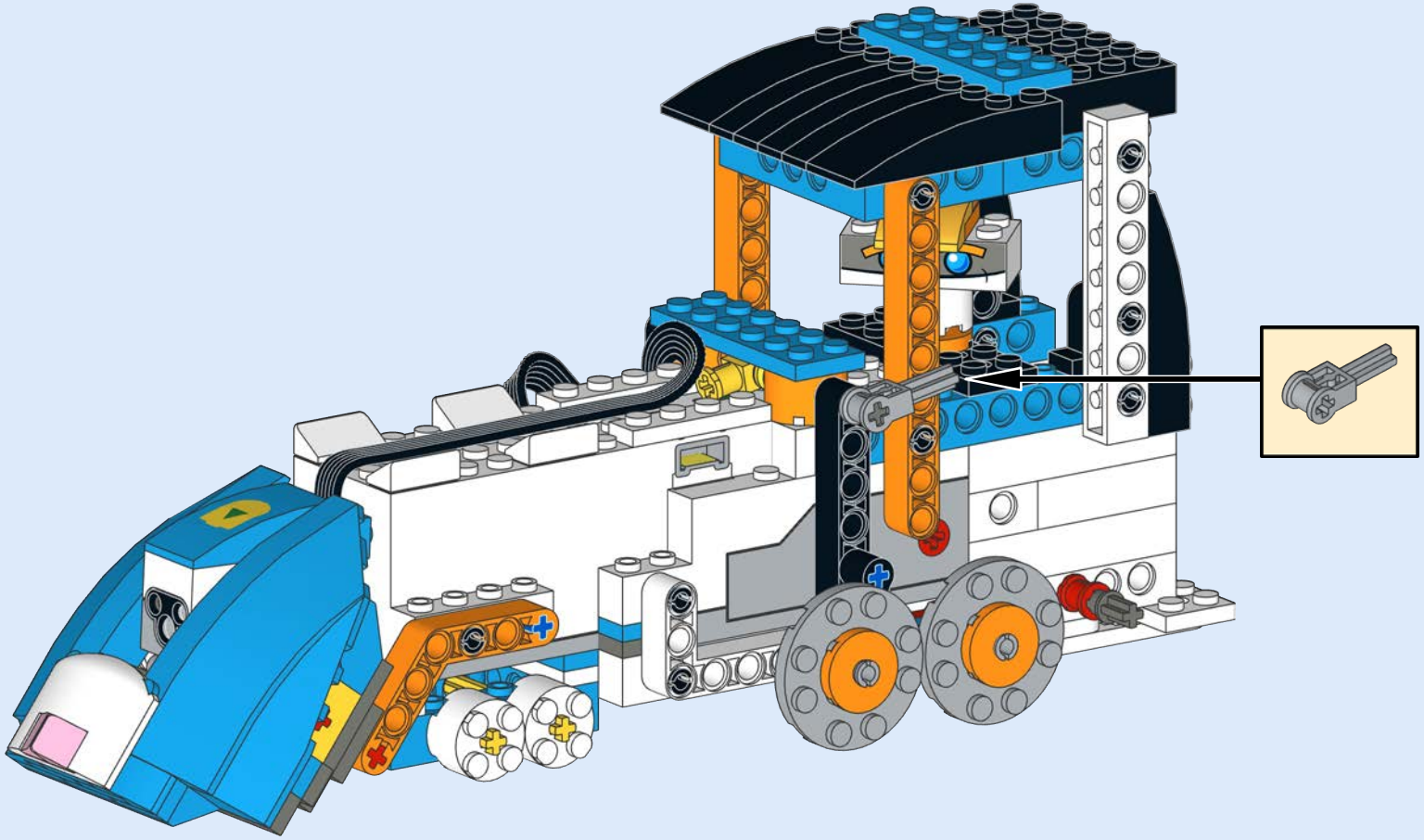

© Benedettelli 2020 - For NON-commercial use only - Please report improper use

58

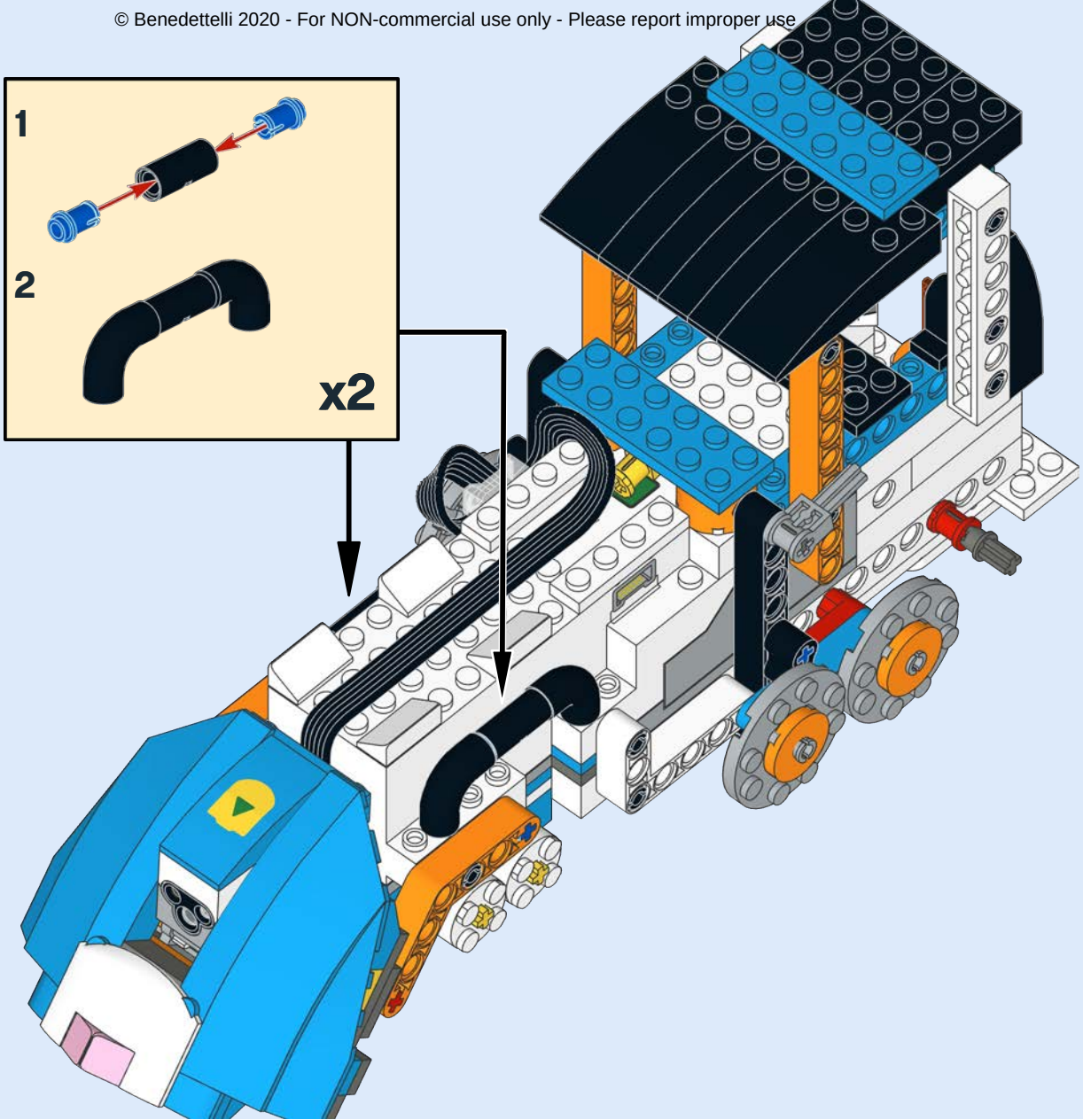

© Benedettelli 2020 - For NON-commercial use only - Please report improper use

59

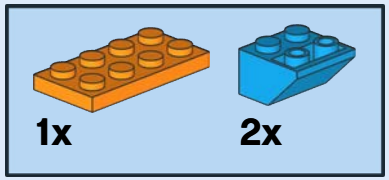

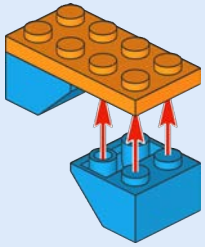

© Benedettelli 2020 - For NON-commercial use only - Please report improper use

60

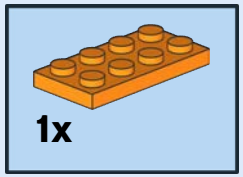

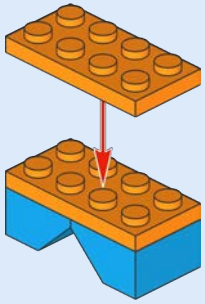

© Benedettelli 2020 - For NON-commercial use only - Please report improper use

61

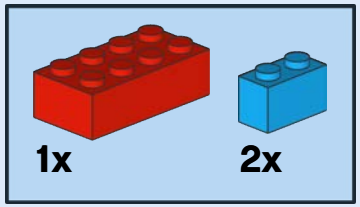

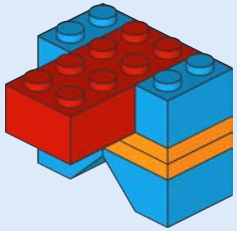

© Benedettelli 2020 - For NON-commercial use only - Please report improper use

62

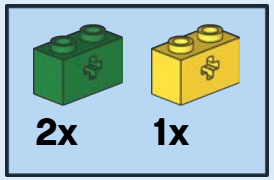

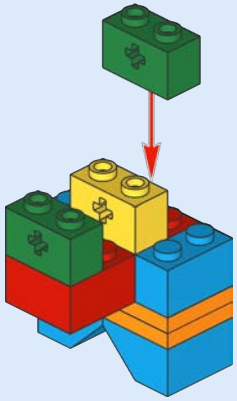

© Benedettelli 2020 - For NON-commercial use only - Please report improper use

63

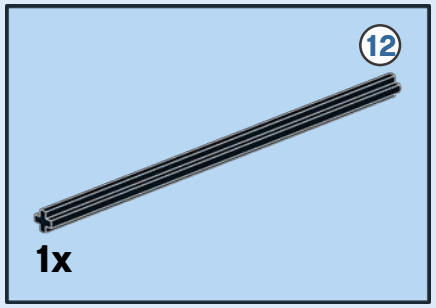

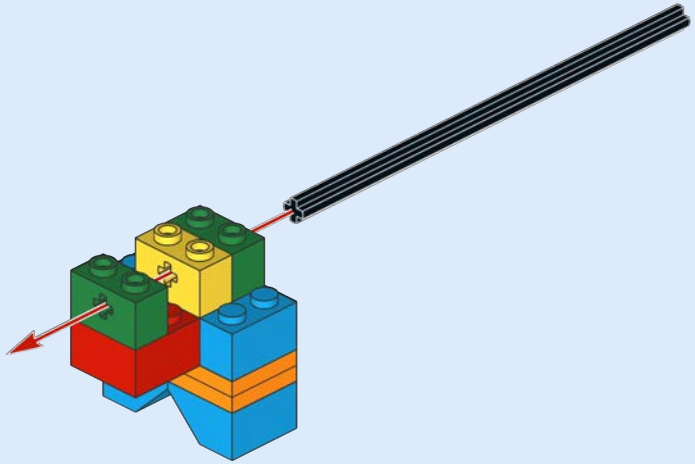

© Benedettelli 2020 - For NON-commercial use only - Please report improper use

64

The axle sticks out
3 LEGO units
on this side.

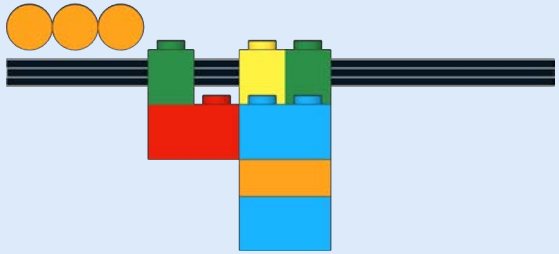

© Benedettelli 2020 - For NON-commercial use only - Please report improper use

65

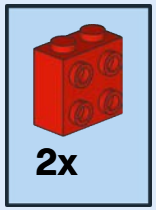

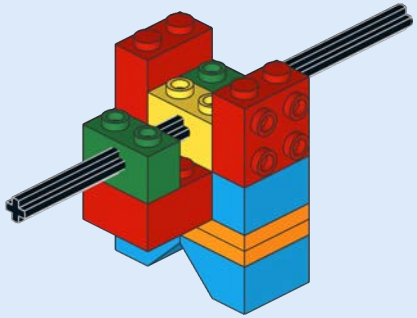

© Benedettelli 2020 - For NON-commercial use only - Please report improper use

66

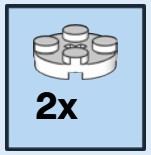

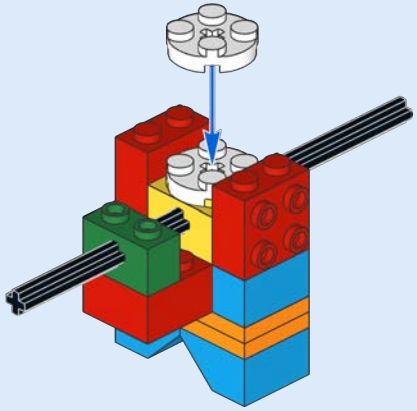

© Benedettelli 2020 - For NON-commercial use only - Please report improper use

67

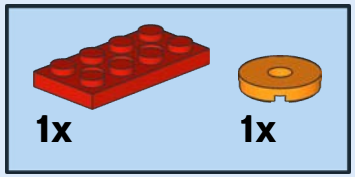

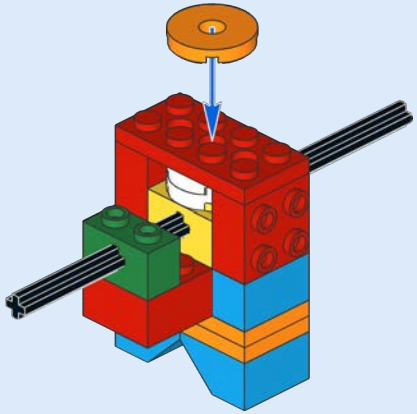

© Benedettelli 2020 - For NON-commercial use only - Please report improper use

68

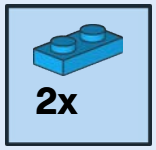

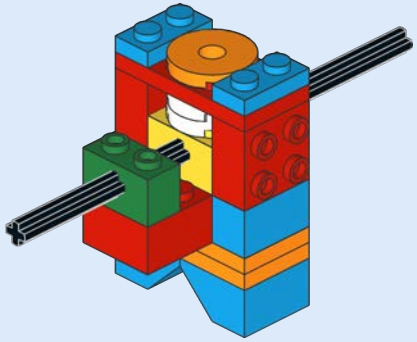

© Benedettelli 2020 - For NON-commercial use only - Please report improper use

69

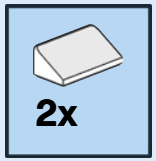

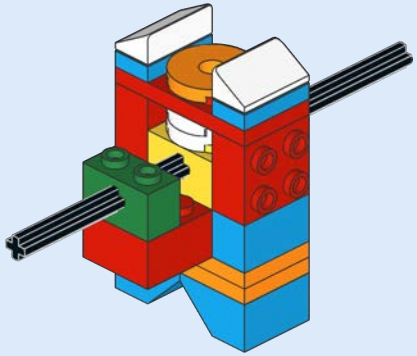

© Benedettelli 2020 - For NON-commercial use only - Please report improper use

70

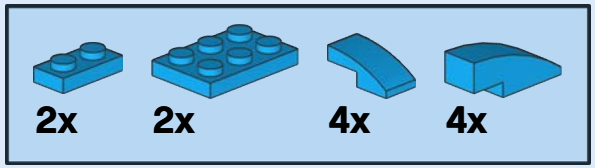

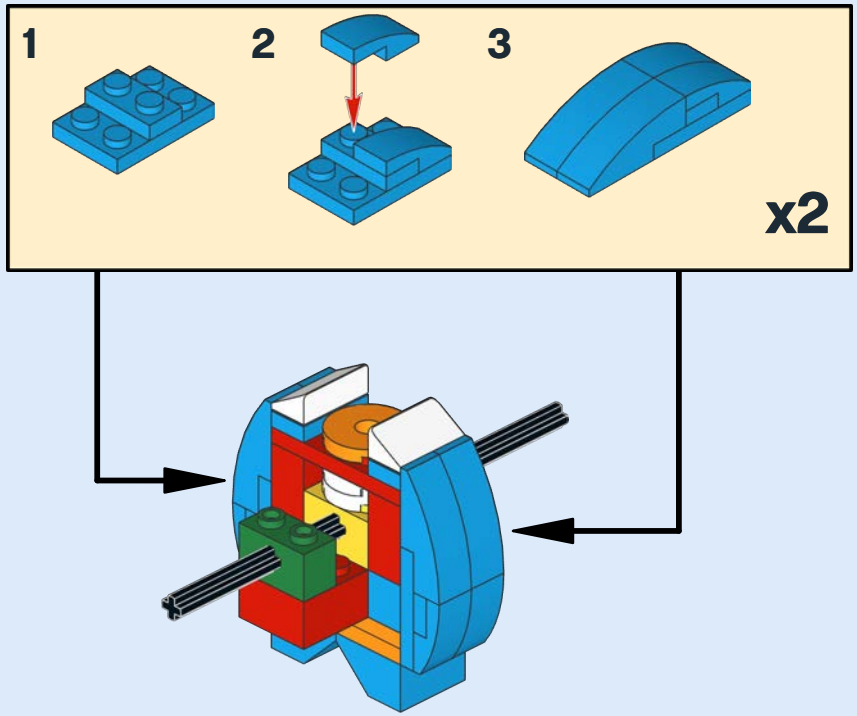

© Benedettelli 2020 - For NON-commercial use only - Please report improper use

71

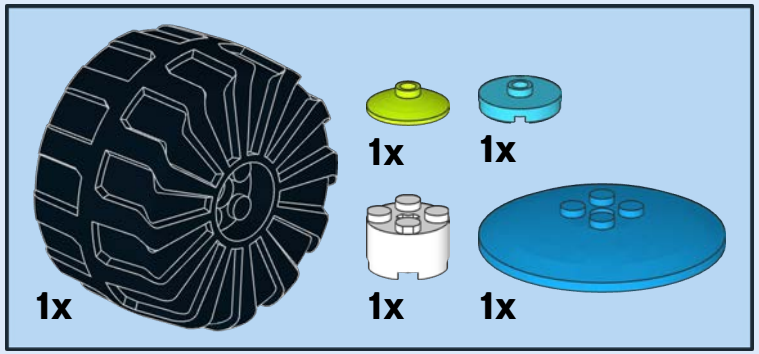

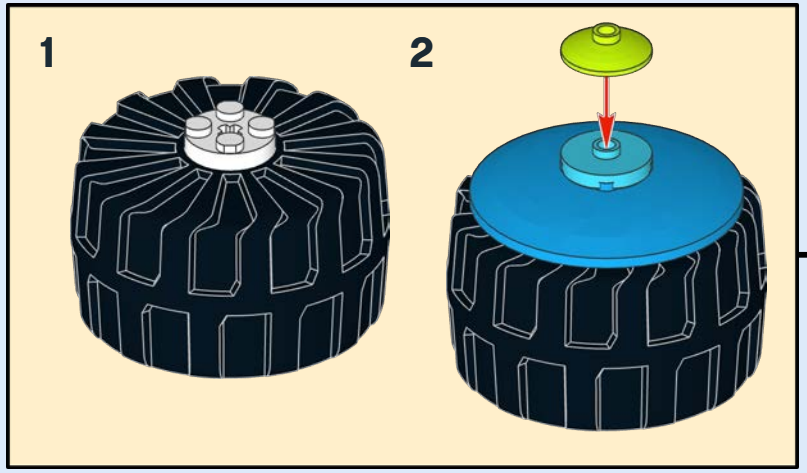

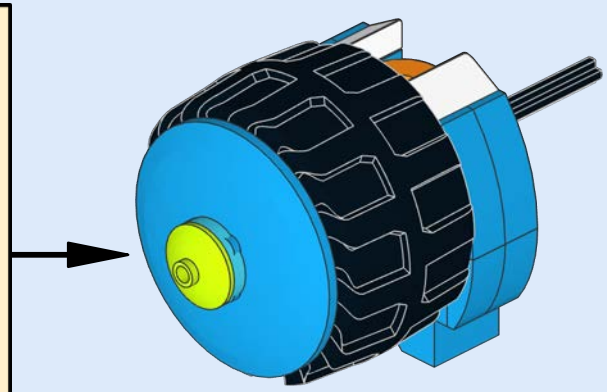

© Benedettelli 2020 - For NON-commercial use only - Please report improper use

72

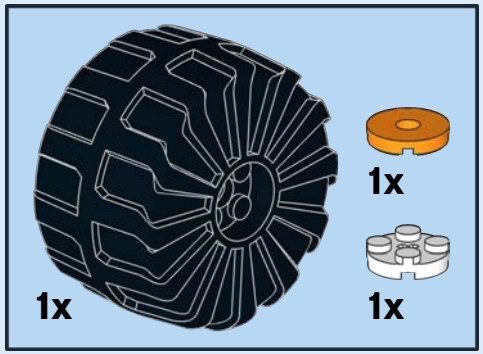

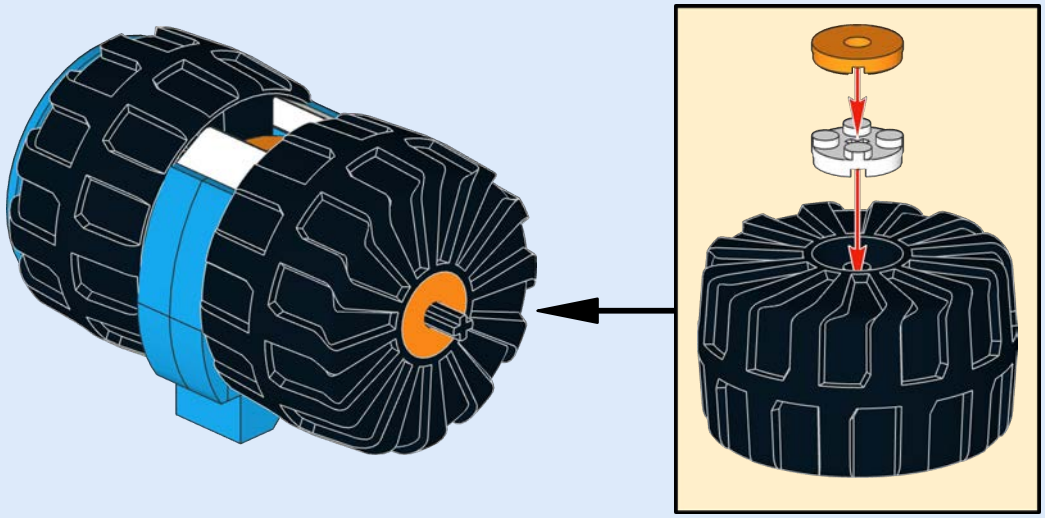

© Benedettelli 2020 - For NON-commercial use only - Please report improper use

73

1

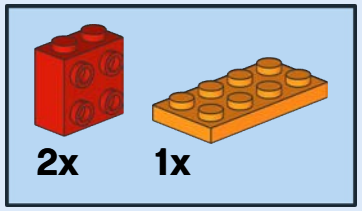

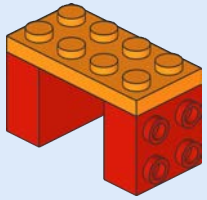

2

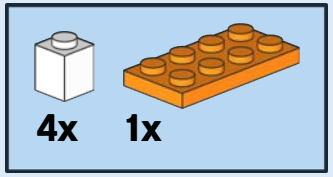

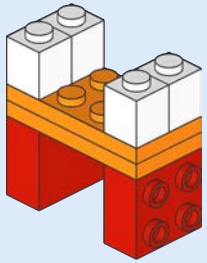

3

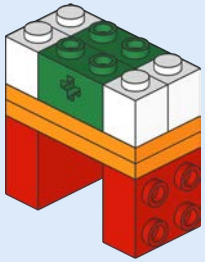

4

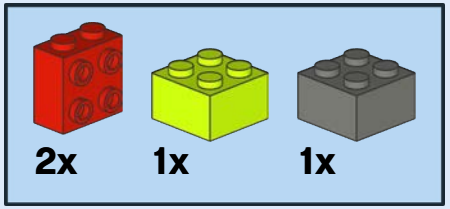

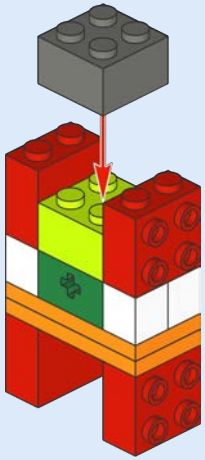

5

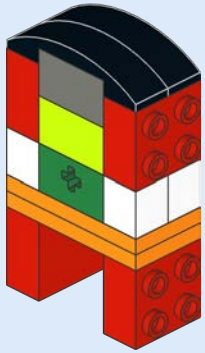

6

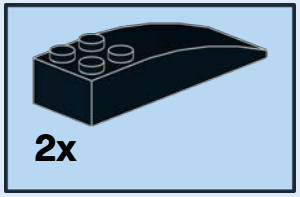

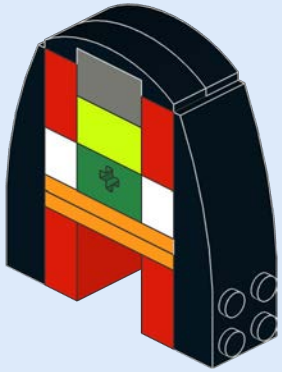

© Benedettelli 2020 - For NON-commercial use only - Please report improper use

74

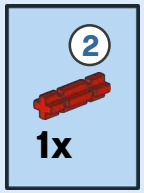

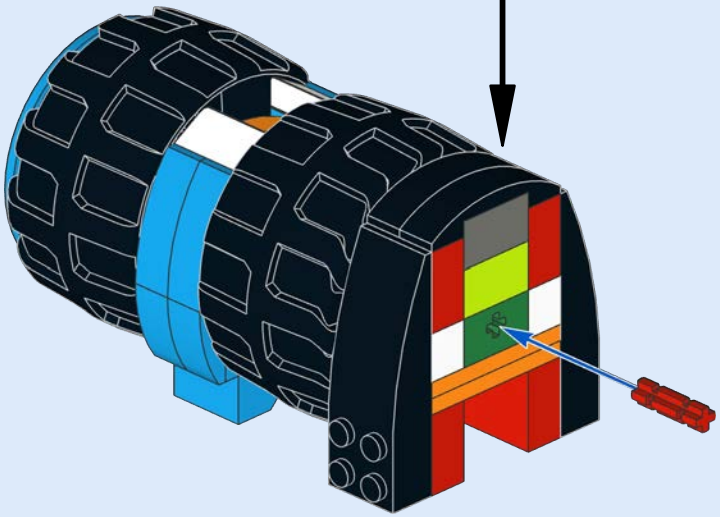

© Benedettelli 2020 - For NON-commercial use only - Please report improper use

75

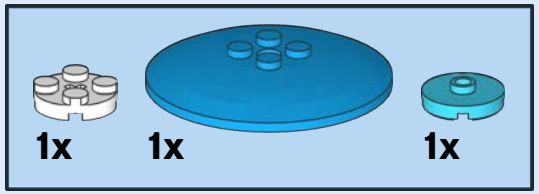

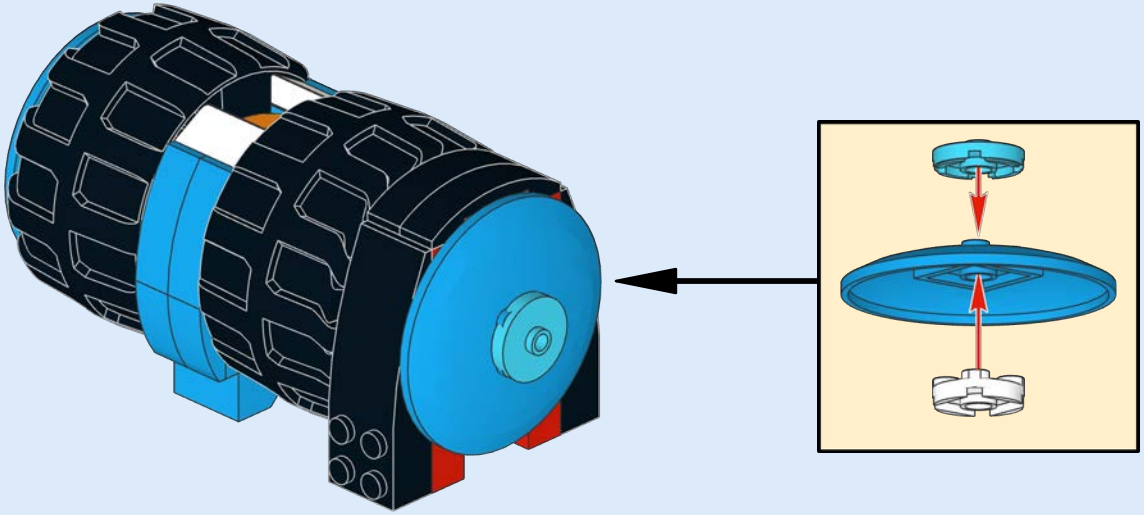

© Benedettelli 2020 - For NON-commercial use only - Please report improper use

76

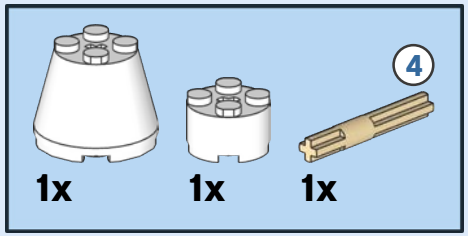

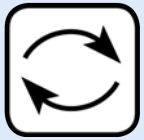

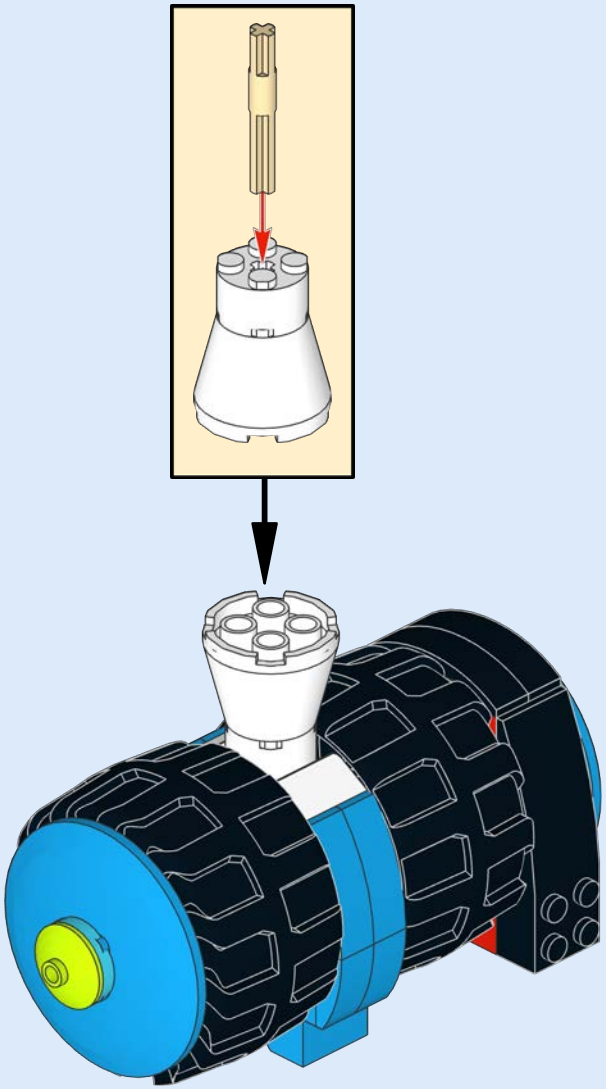

© Benedettelli 2020 - For NON-commercial use only - Please report improper use

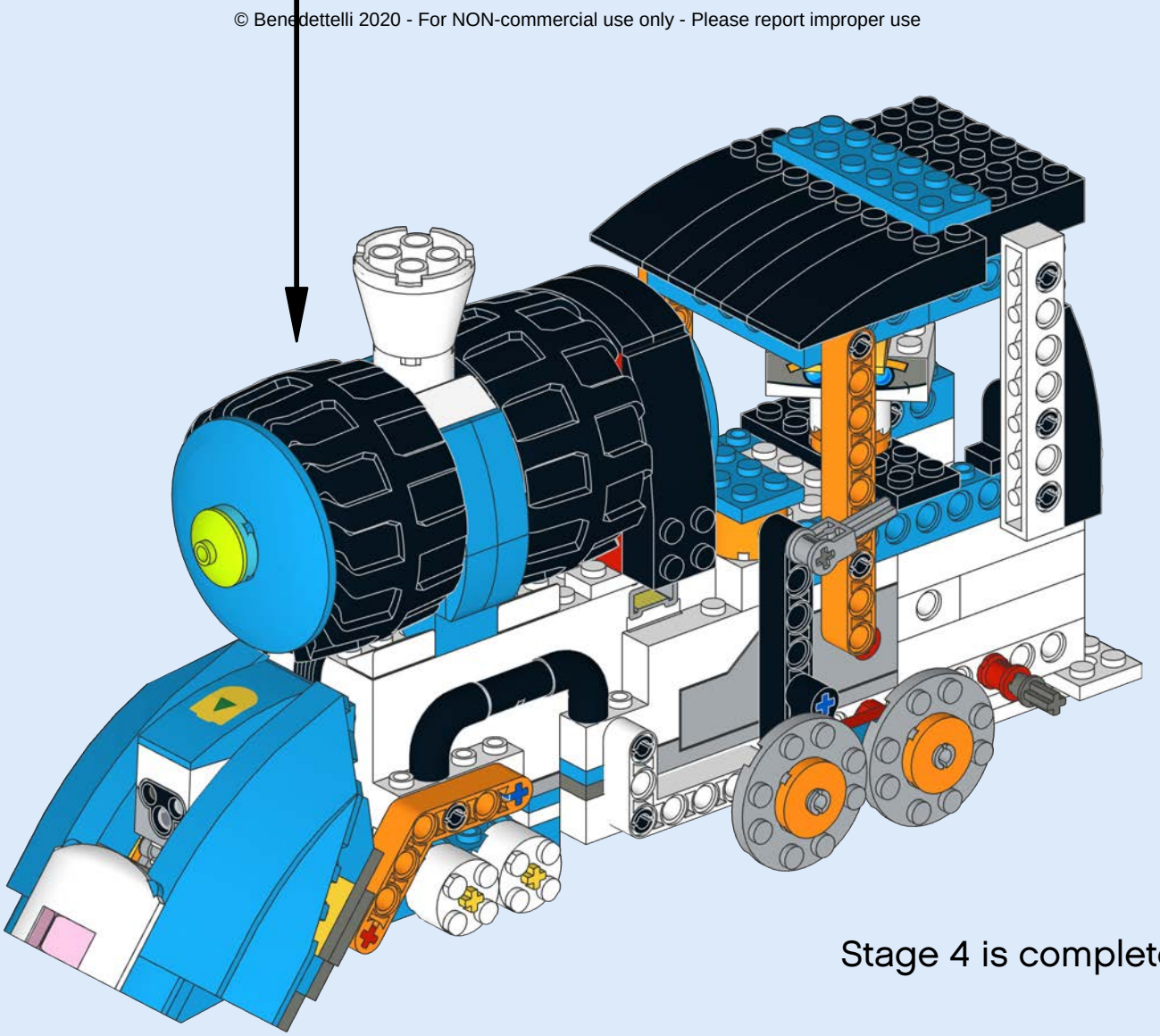

Stage 4 is complete.

© Benedettelli 2020 - For NON-commercial use only - Please report improper use

78

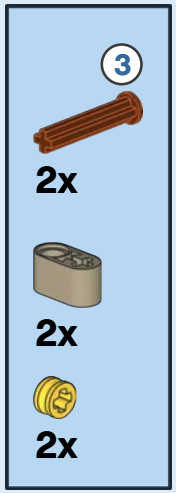

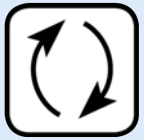

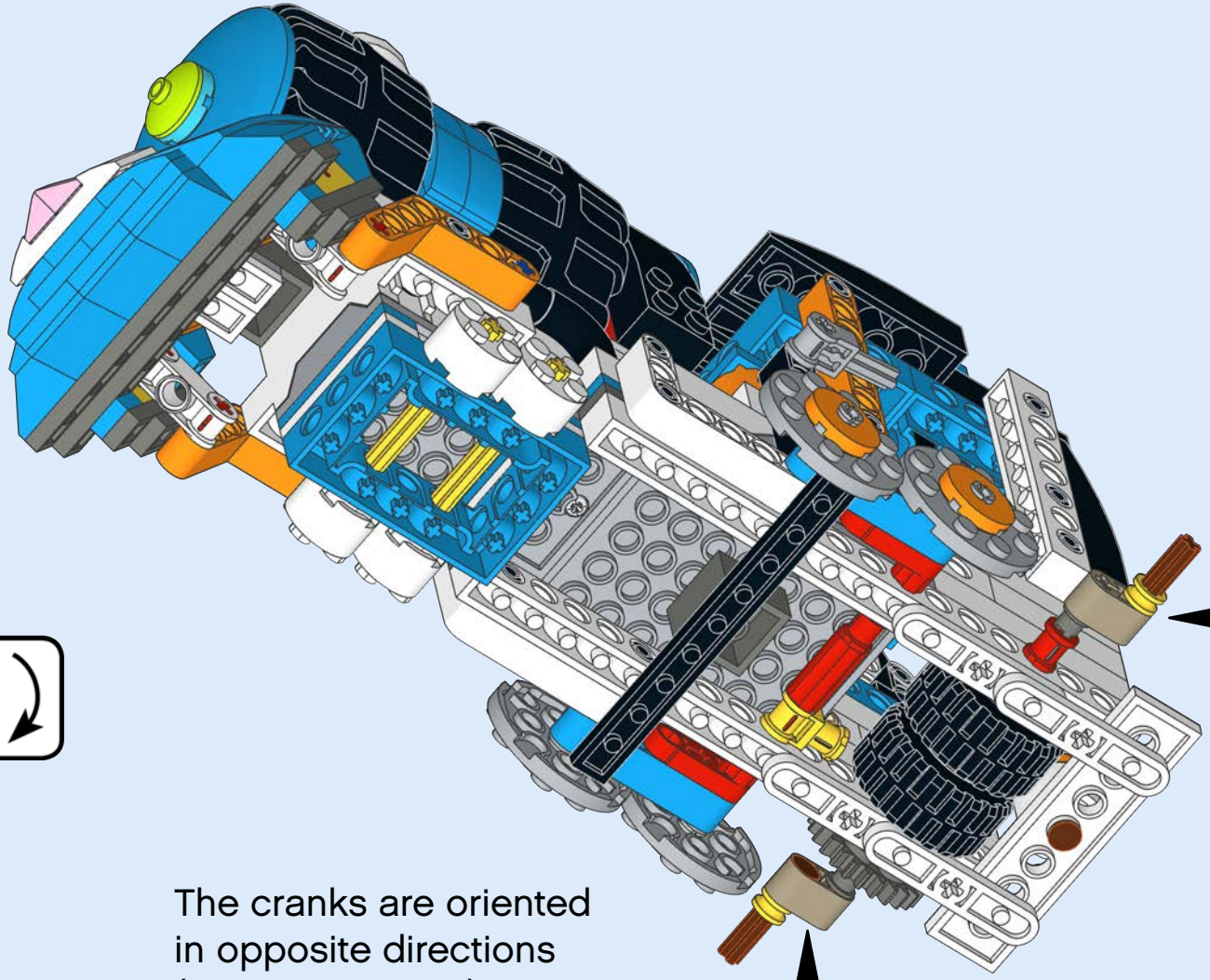

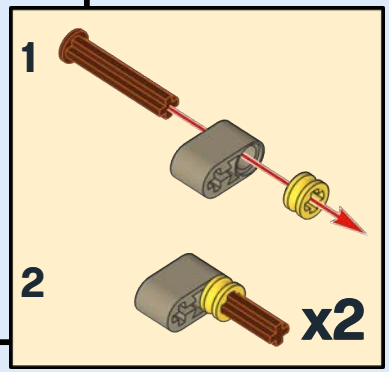

The cranks are oriented in opposite directions (half a turn apart).

© Benedettelli 2020 - For NON-commercial use only - Please report improper use

79

1

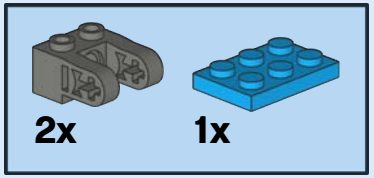

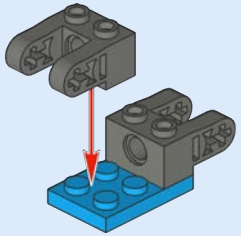

2

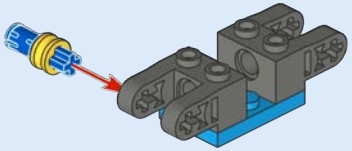

3

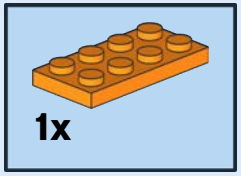

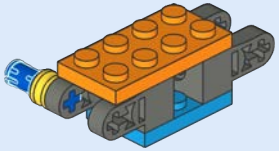

4

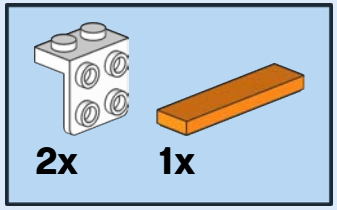

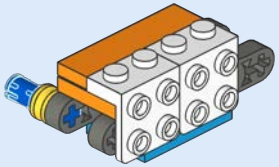

5

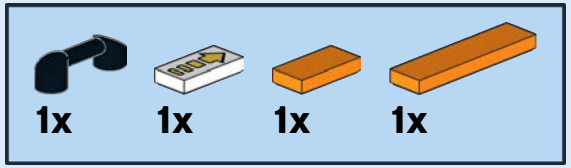

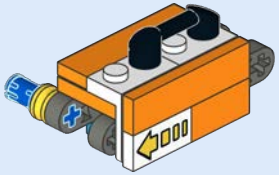

6

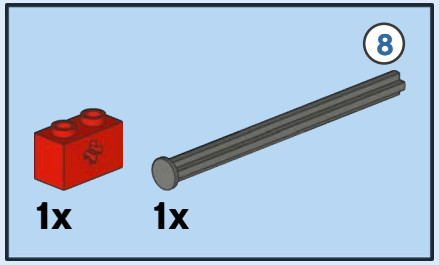

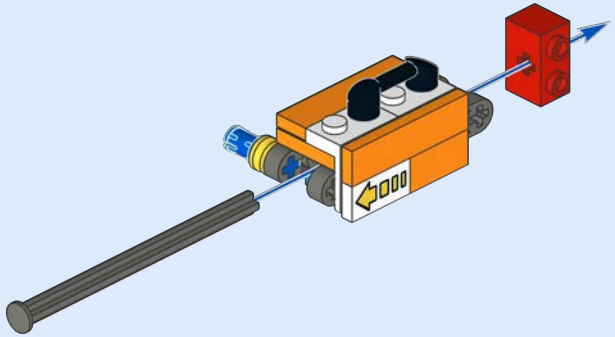

© Benedettelli 2020 - For NON-commercial use only - Please report improper use

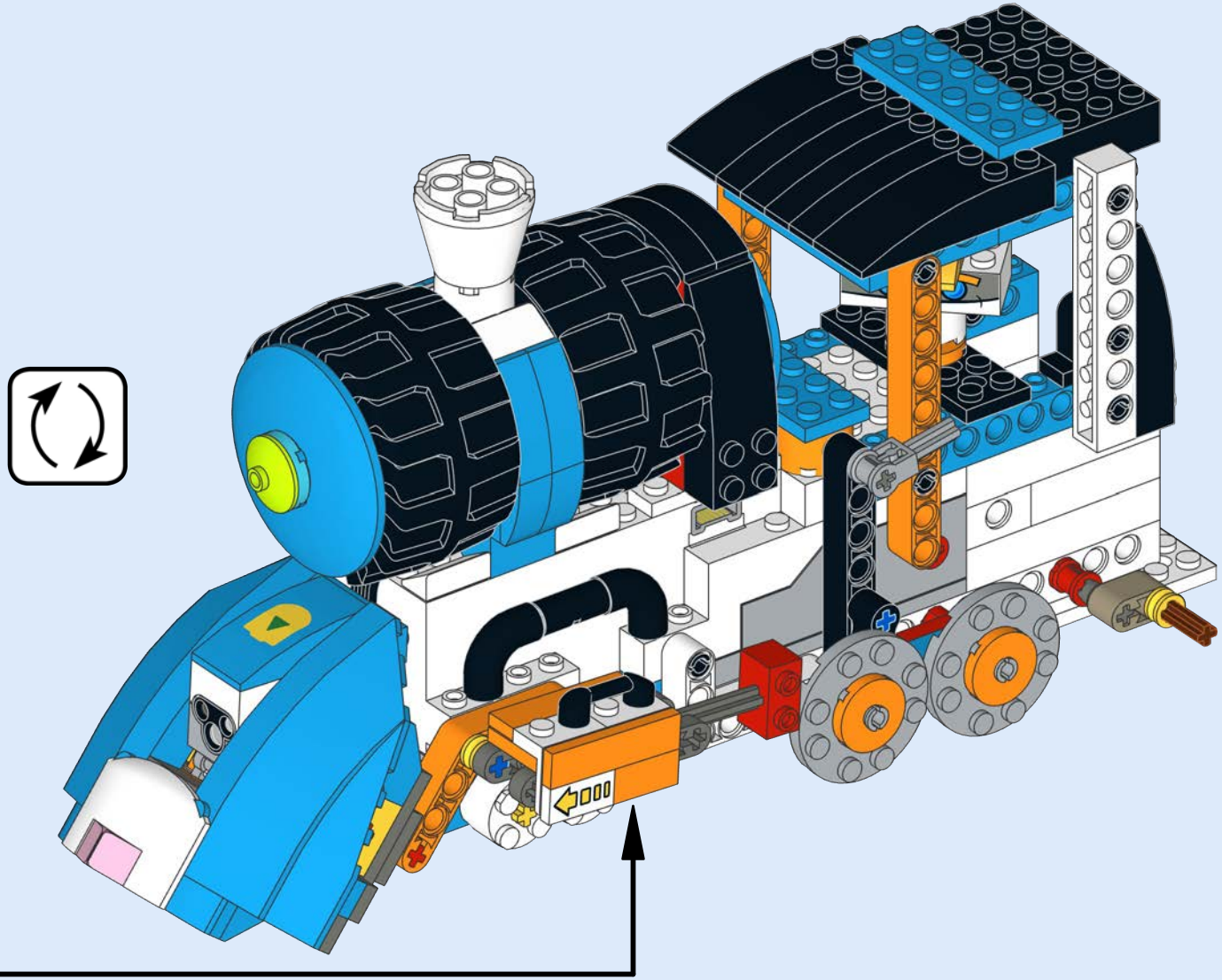

© Benedettelli 2020 - For NON-commercial use only - Please report improper use

81

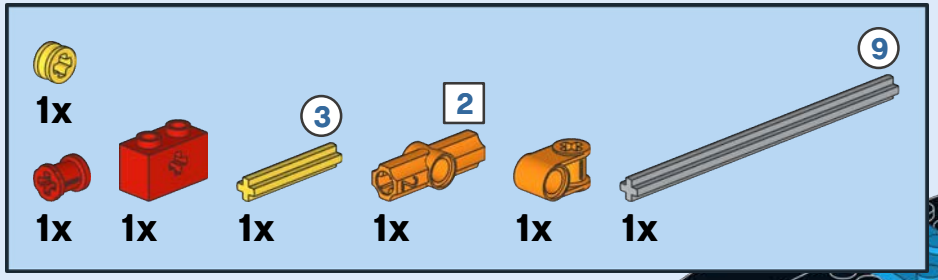

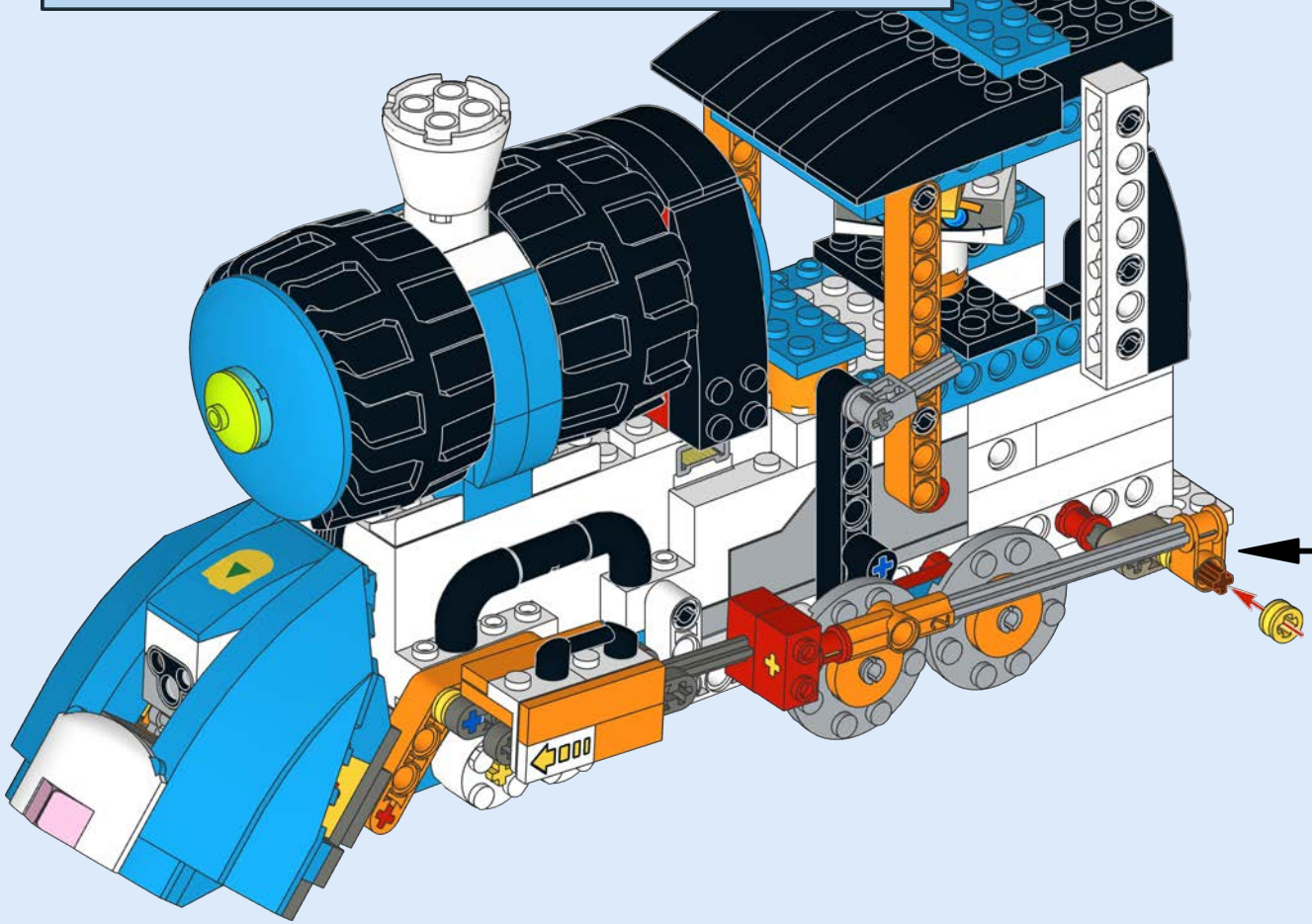

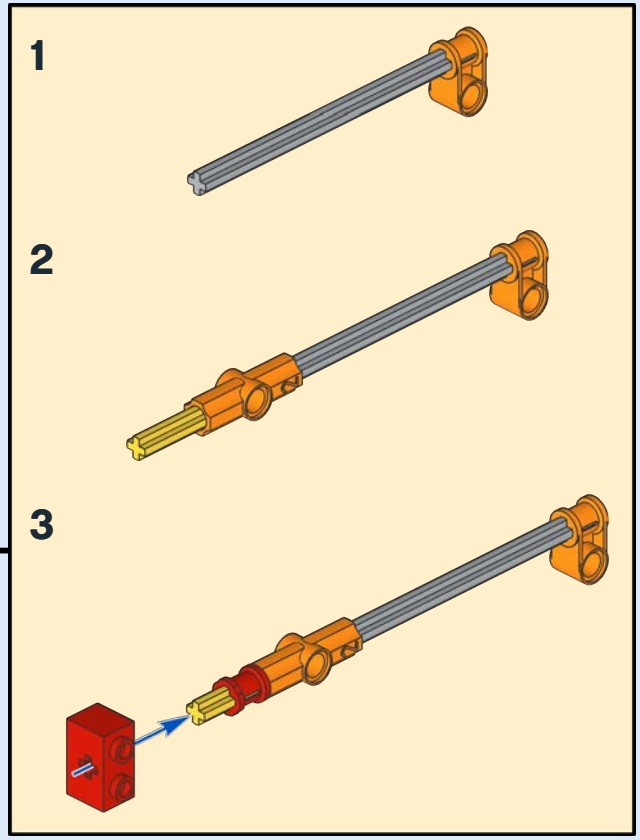

© Benedettelli 2020 - For NON-commercial use only - Please report improper use

82

1

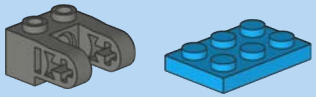

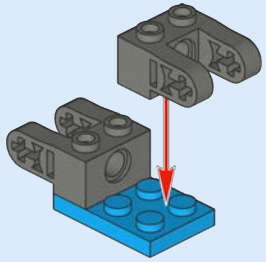

2

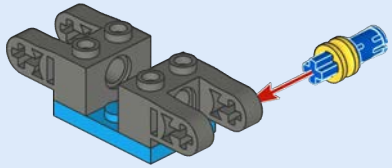

3

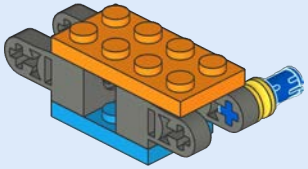

4

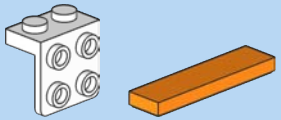

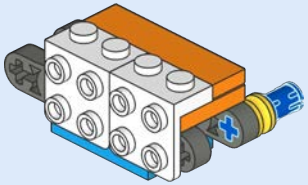

5

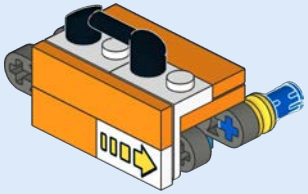

6

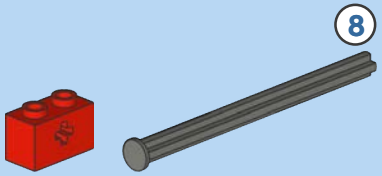

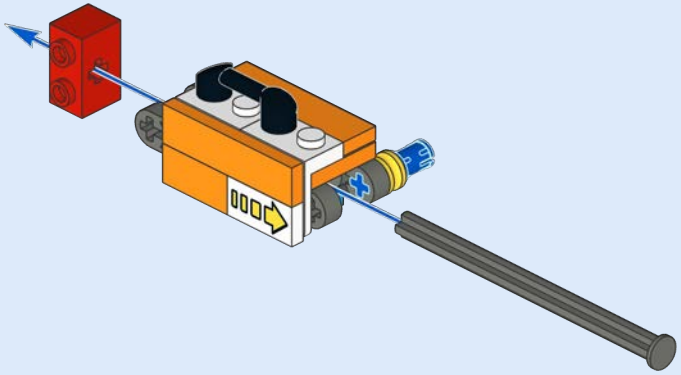

© Benedettelli 2020 - For NON-commercial use only - Please report improper use

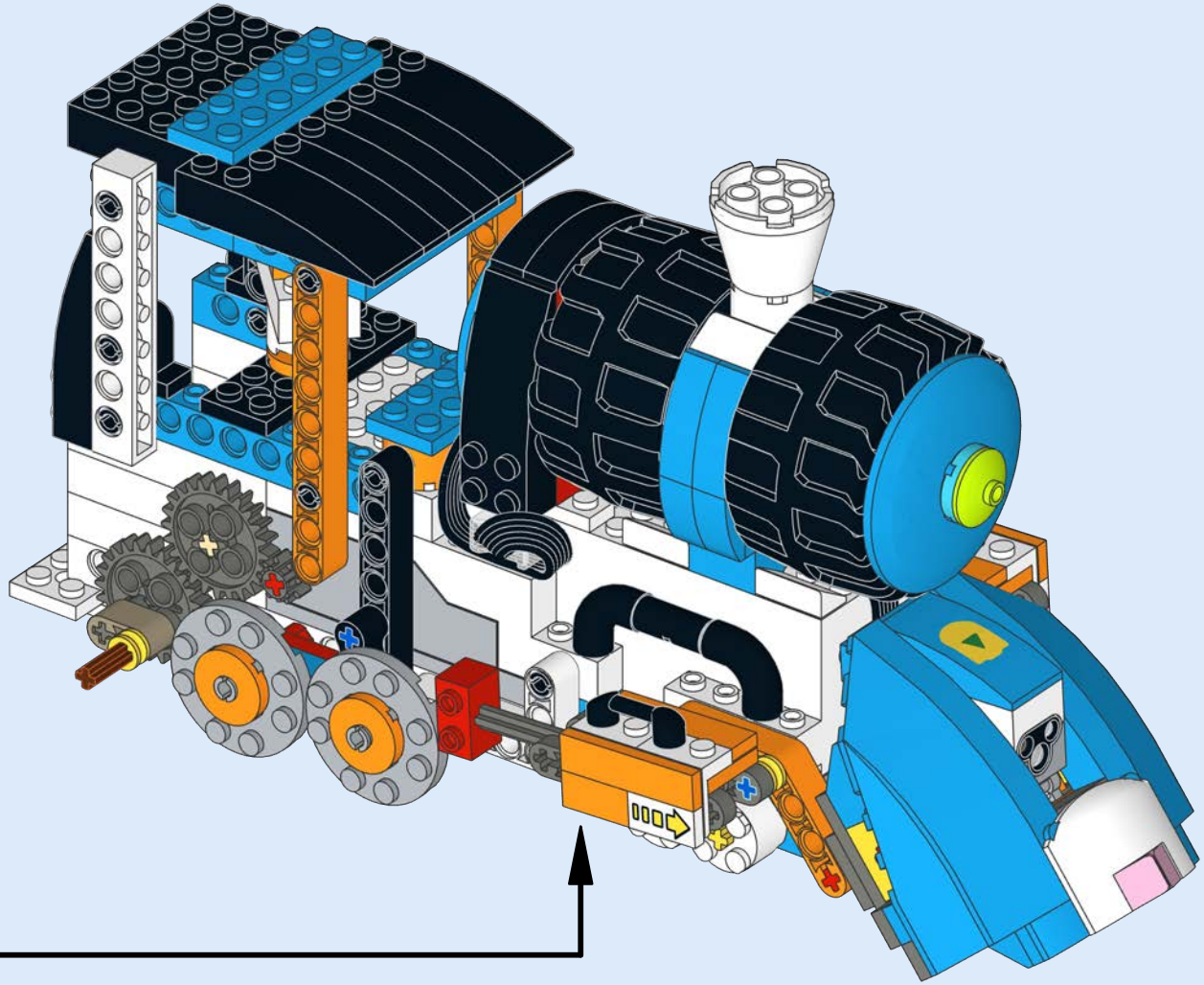

© Benedettelli 2020 - For NON-commercial use only - Please report improper use

84

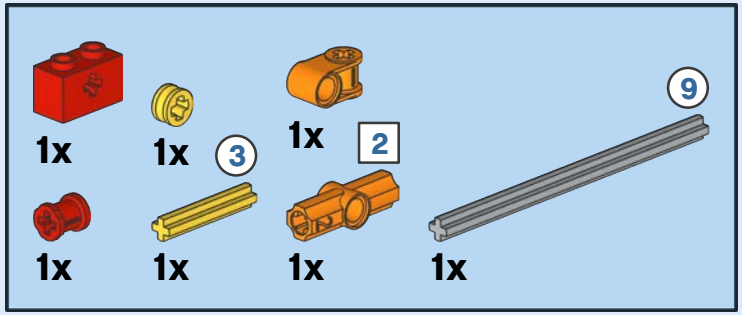

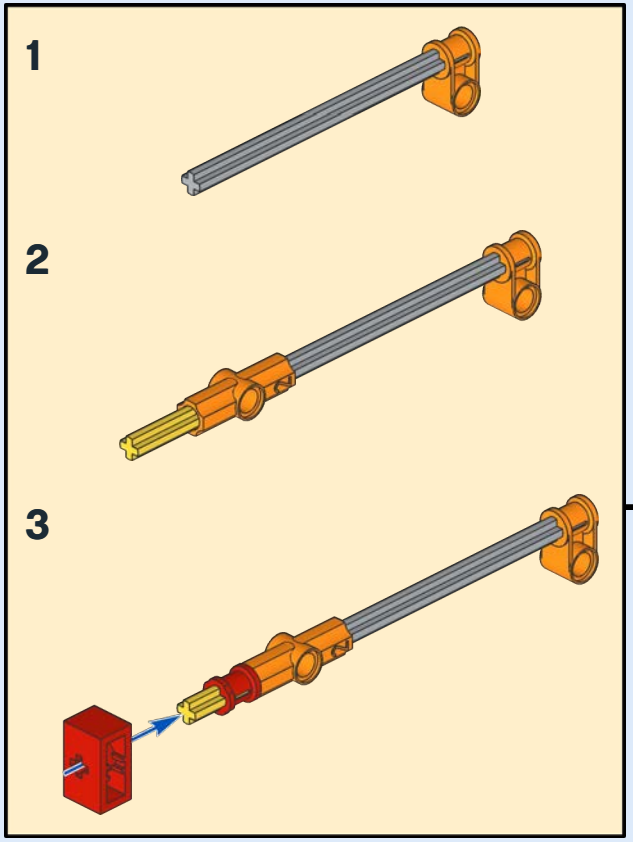

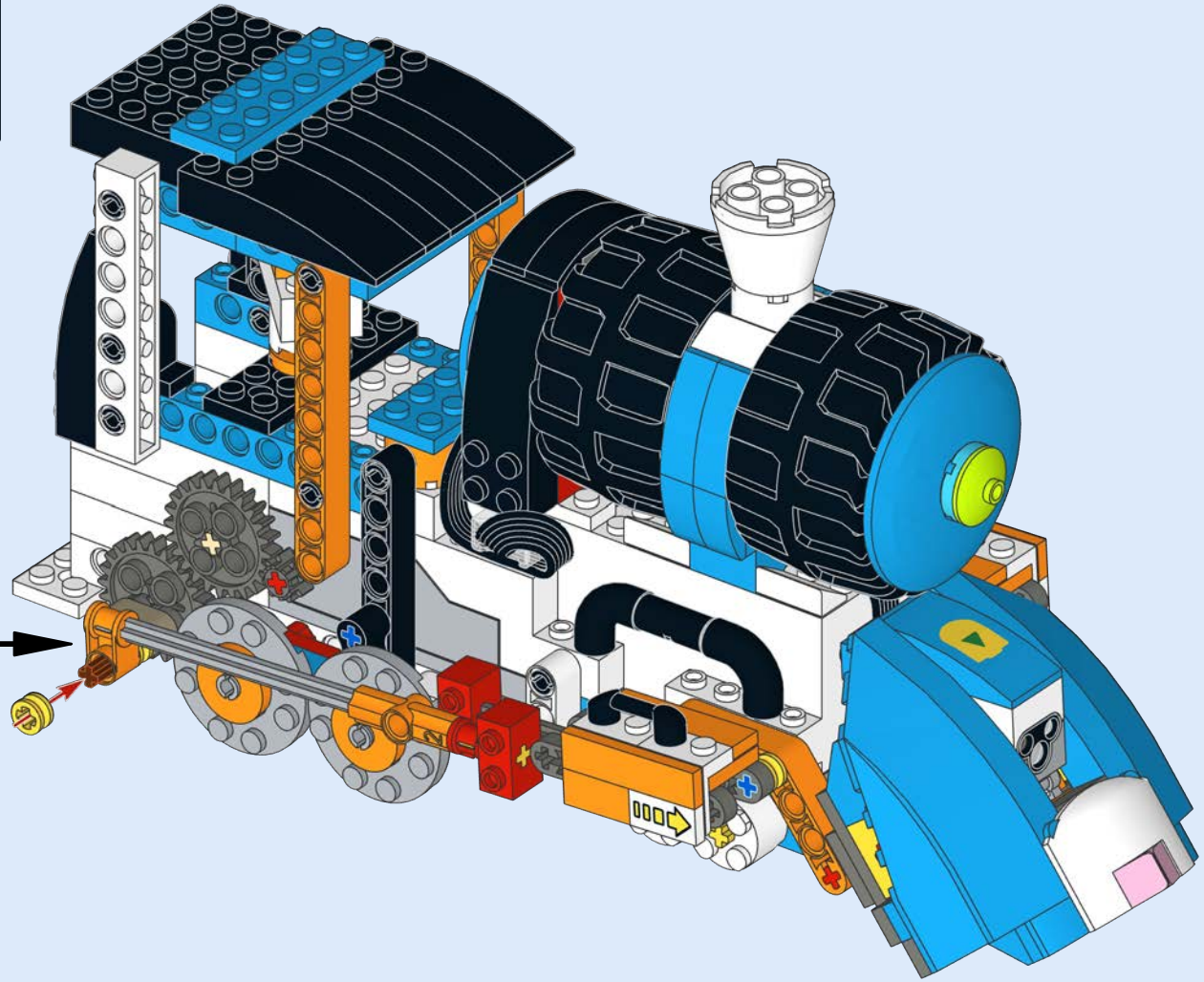

© Benedettelli 2020 - For NON-commercial use only - Please report improper use

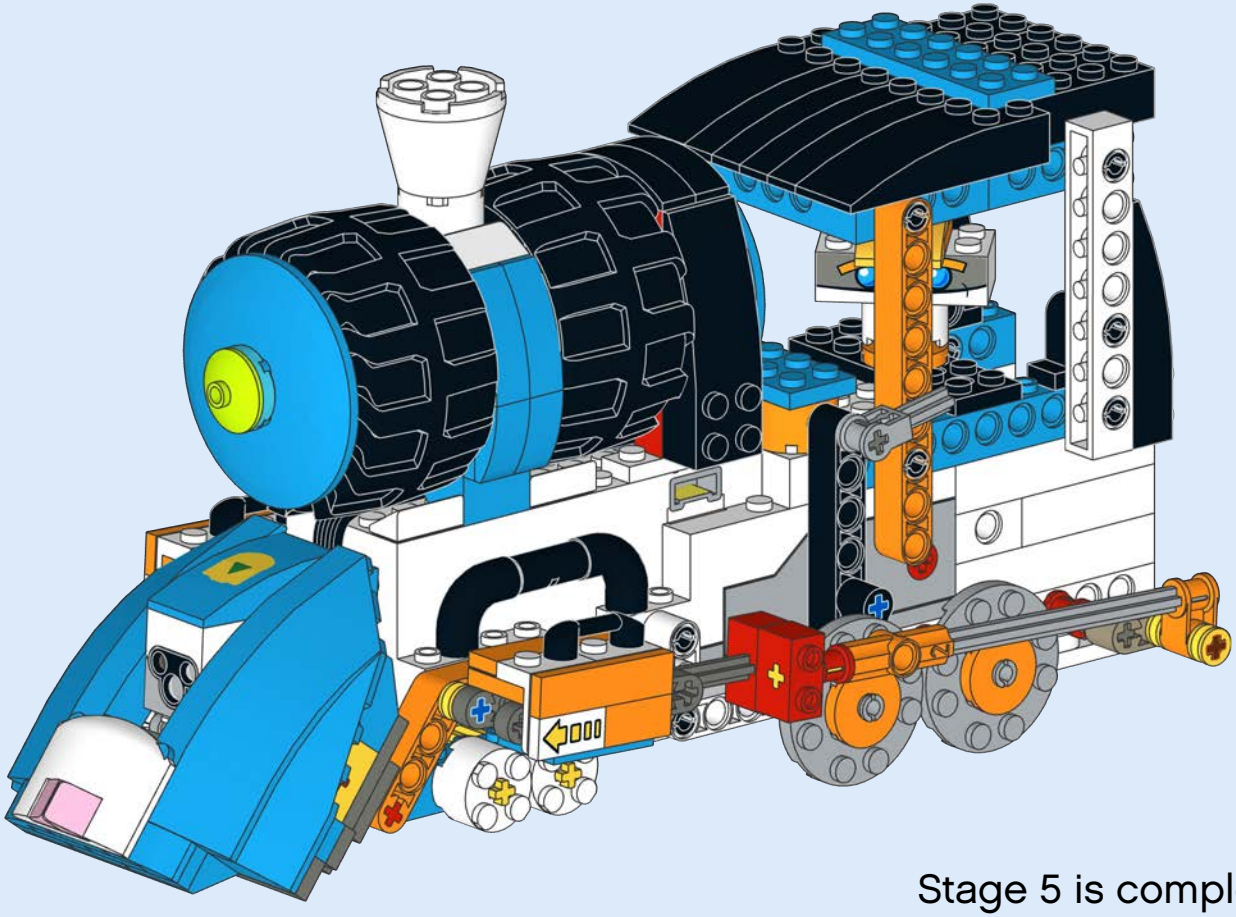

Stage 5 is complete.

© Benedettelli 2020 - For NON-commercial use only - Please report improper use

86

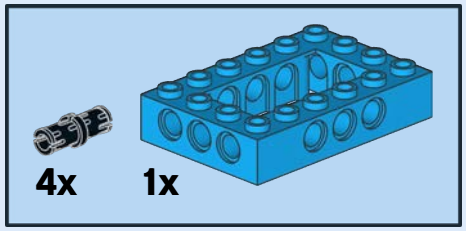

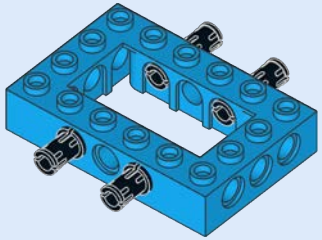

© Benedettelli 2020 - For NON-commercial use only - Please report improper use

87

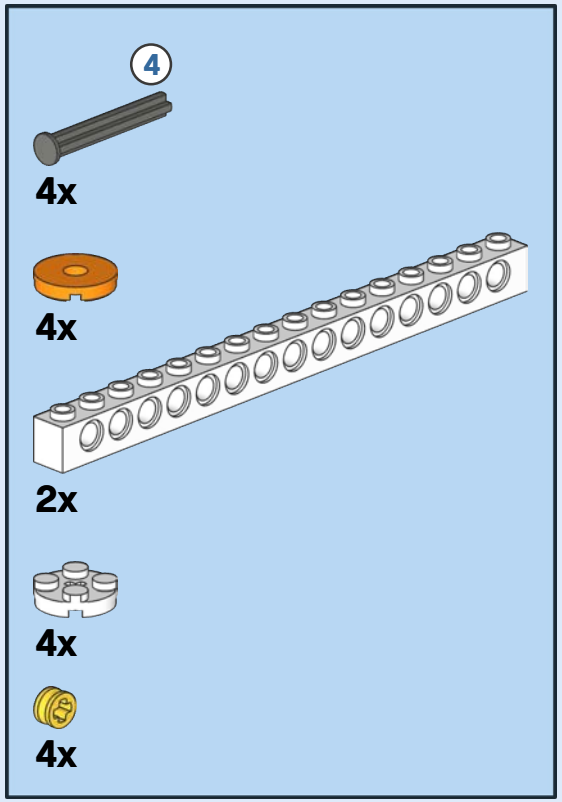

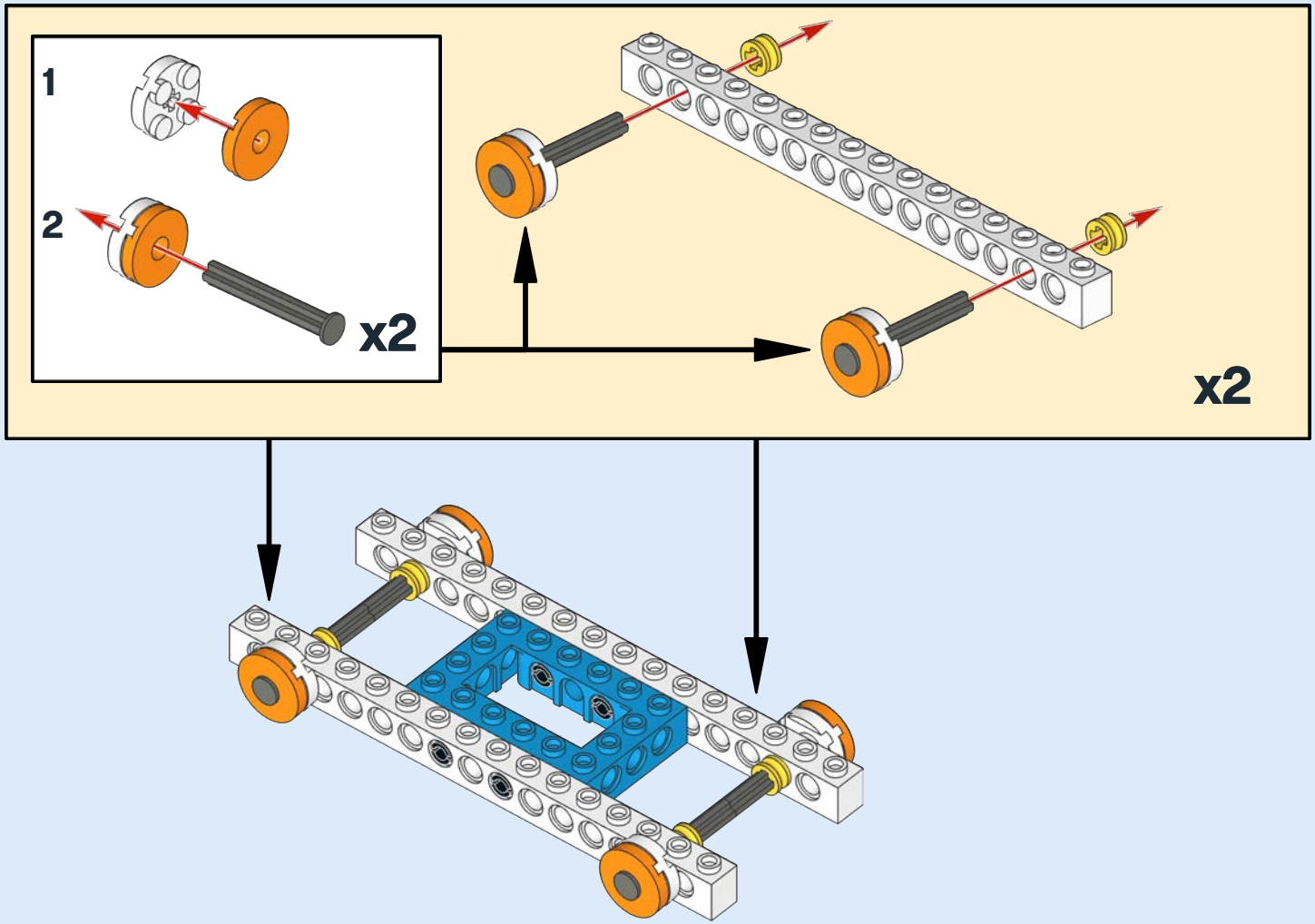

© Benedettelli 2020 - For NON-commercial use only - Please report improper use

88

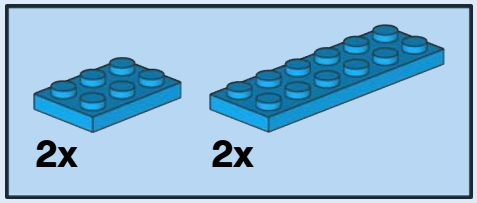

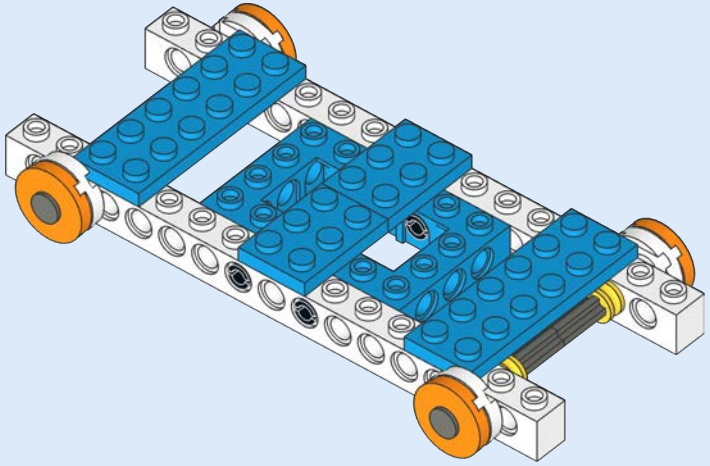

© Benedettelli 2020 - For NON-commercial use only - Please report improper use

89

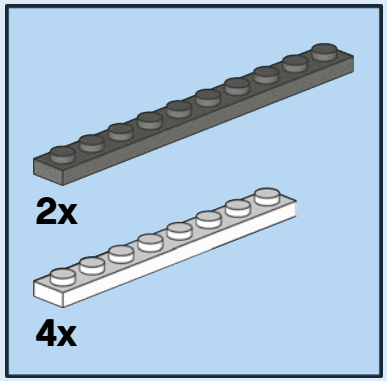

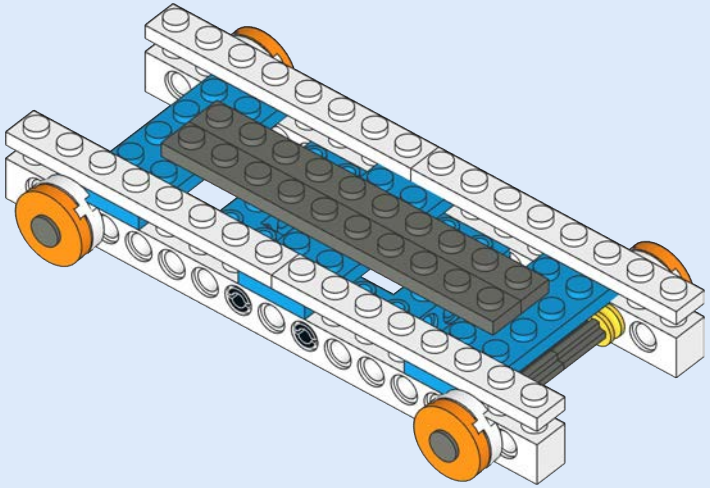

© Benedettelli 2020 - For NON-commercial use only - Please report improper use

90

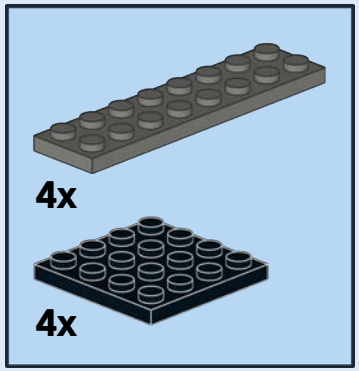

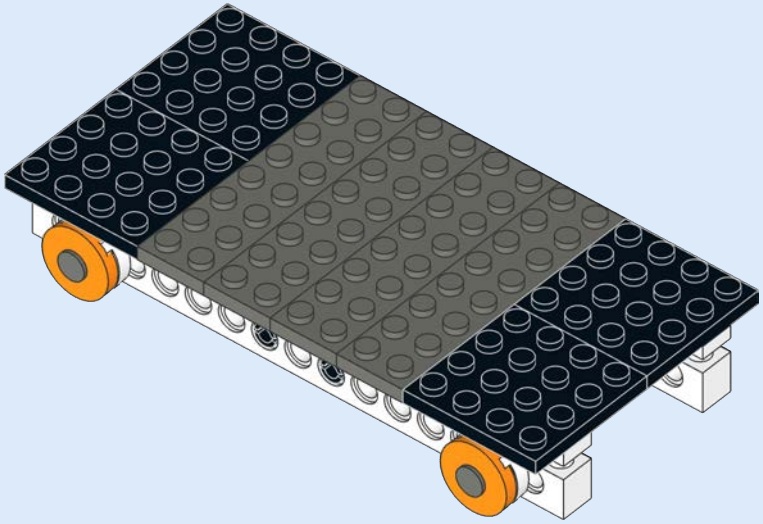

© Benedettelli 2020 - For NON-commercial use only - Please report improper use

91

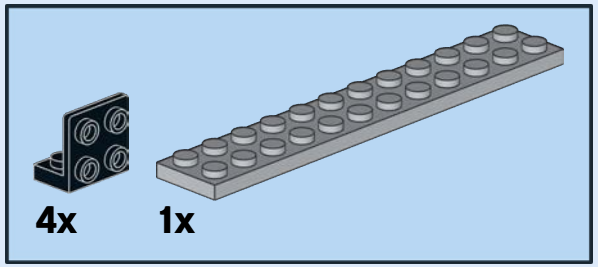

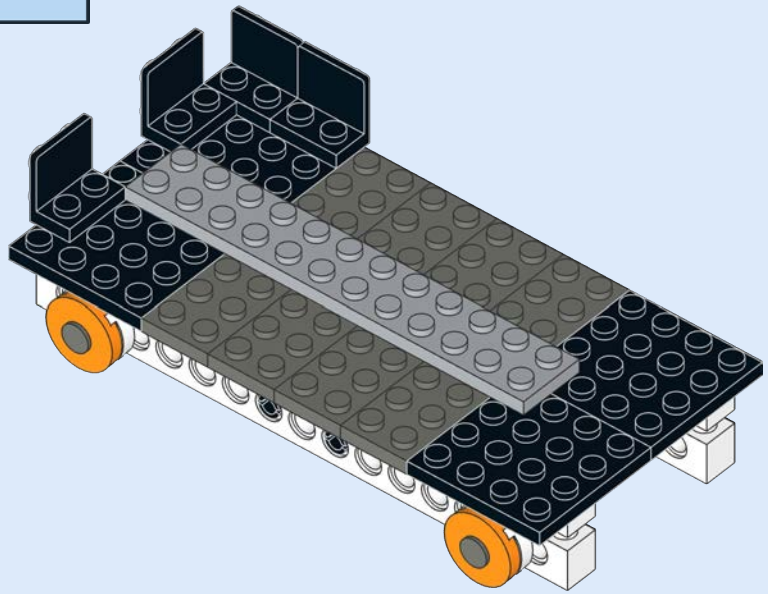

© Benedettelli 2020 - For NON-commercial use only - Please report improper use

92

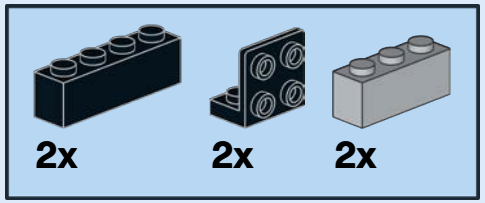

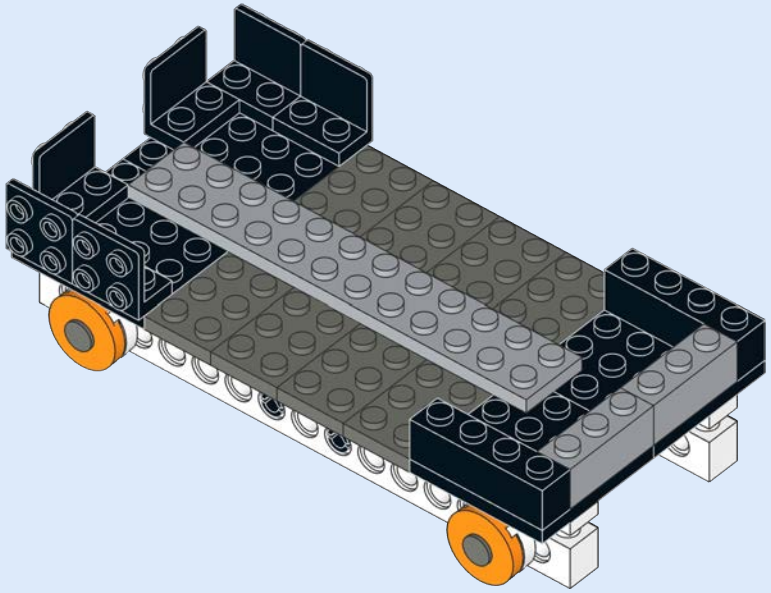

© Benedettelli 2020 - For NON-commercial use only - Please report improper use

93

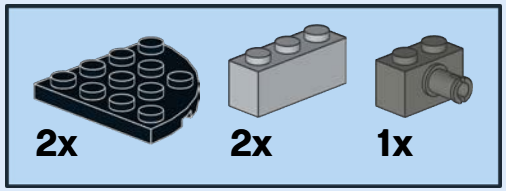

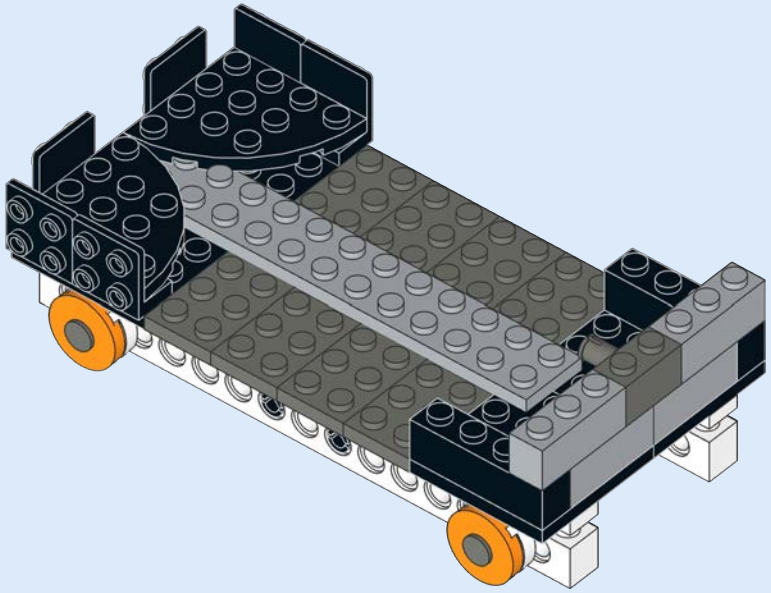

© Benedettelli 2020 - For NON-commercial use only - Please report improper use

94

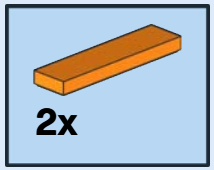

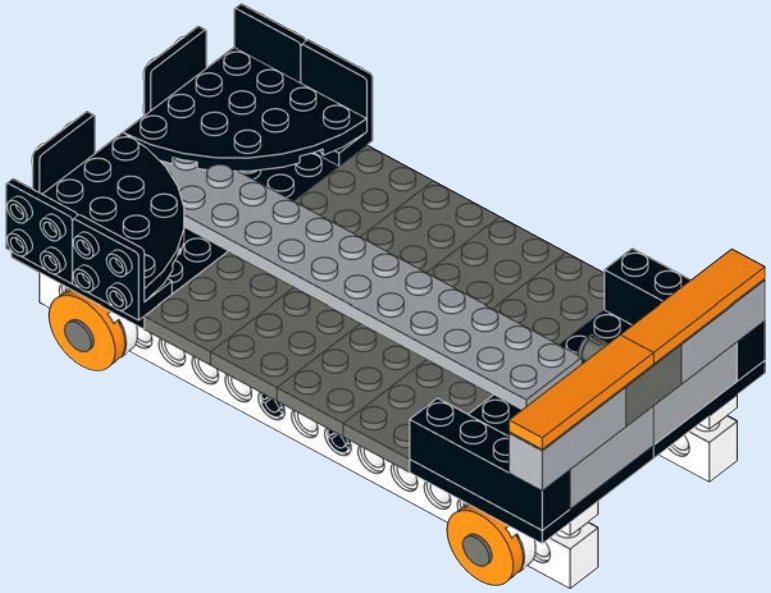

© Benedettelli 2020 - For NON-commercial use only - Please report improper use

95

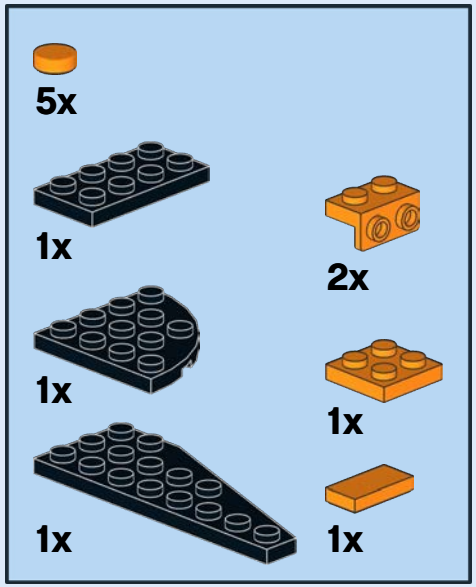

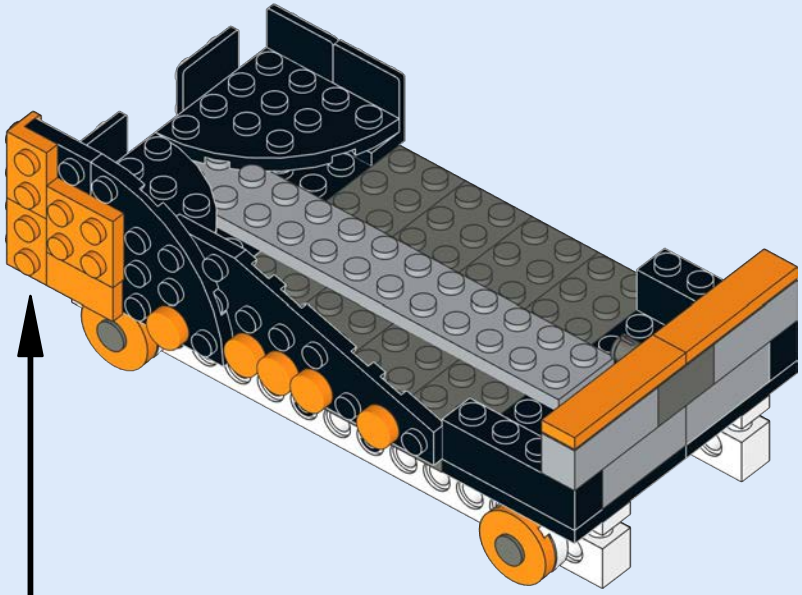

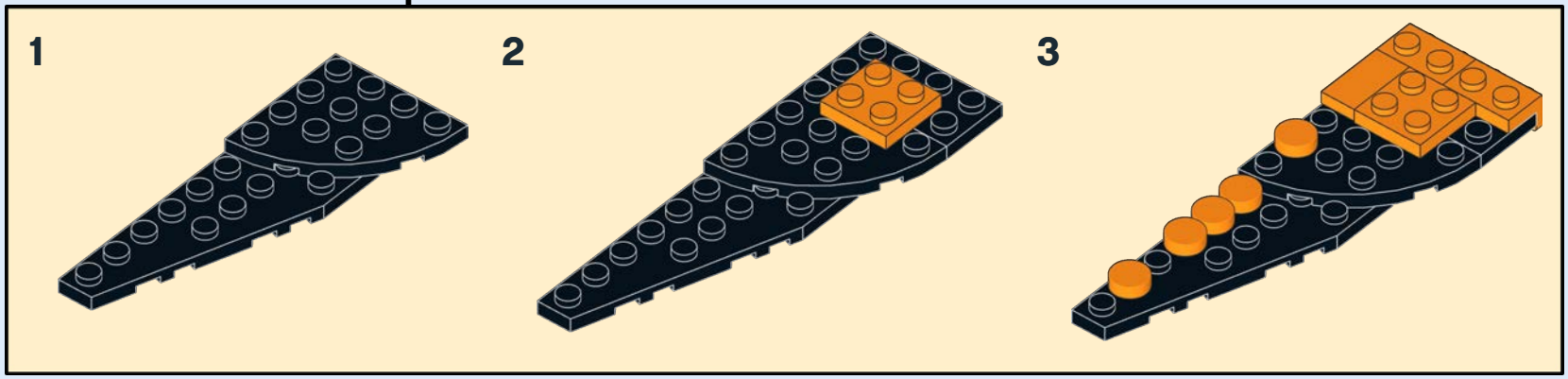

© Benedettelli 2020 - For NON-commercial use only - Please report improper use

96

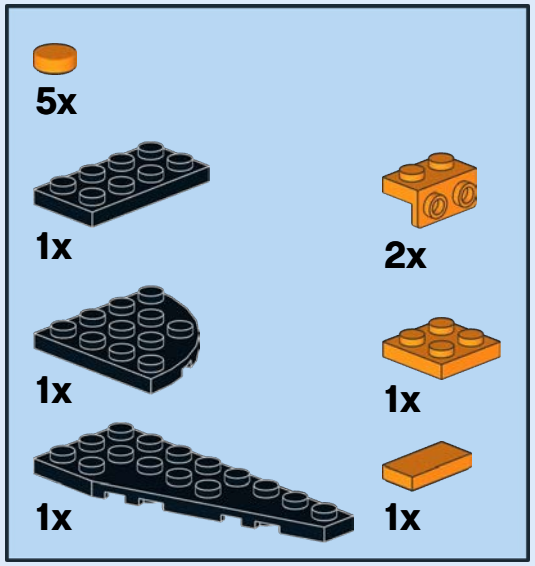

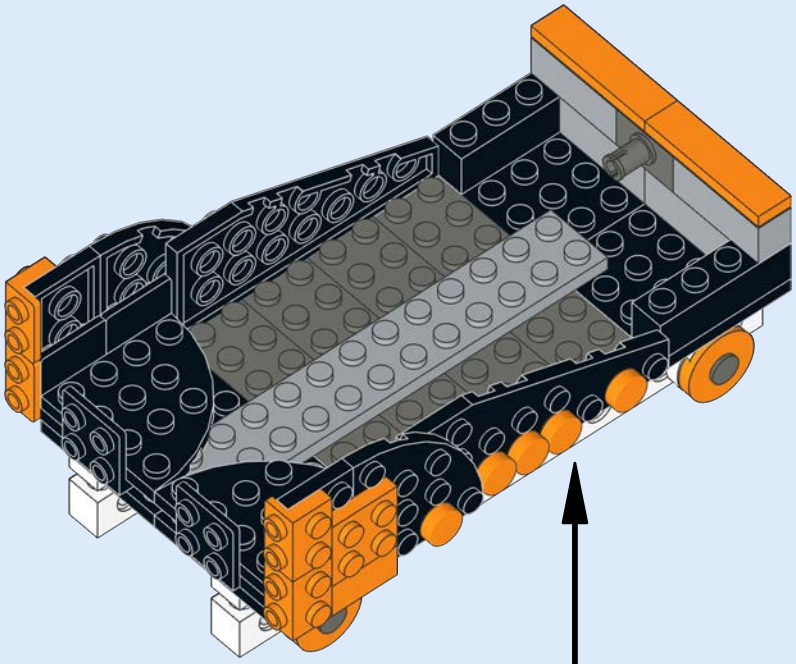

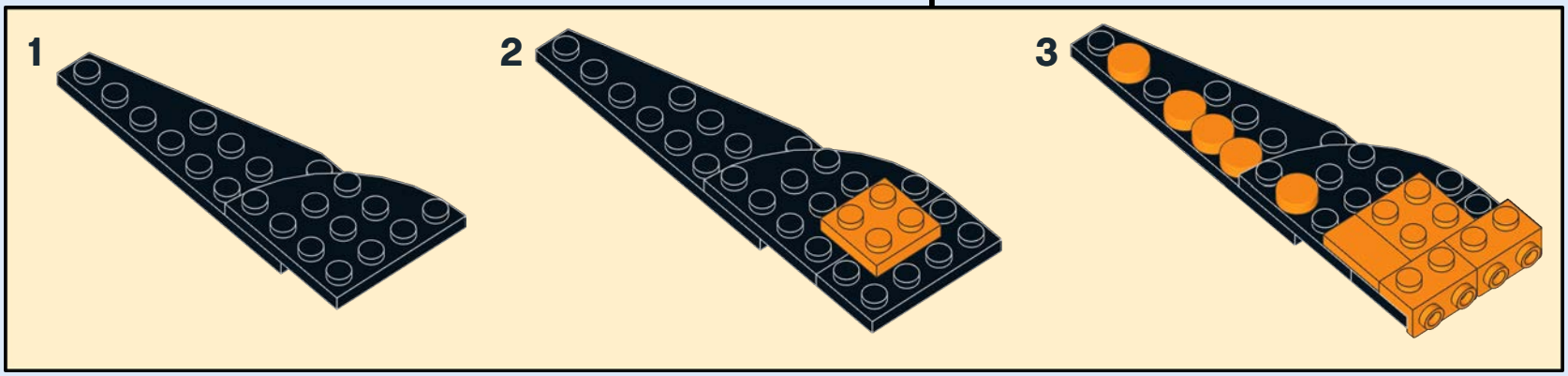

© Benedettelli 2020 - For NON-commercial use only - Please report improper use

97

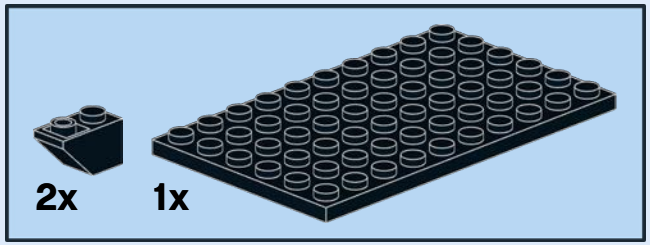

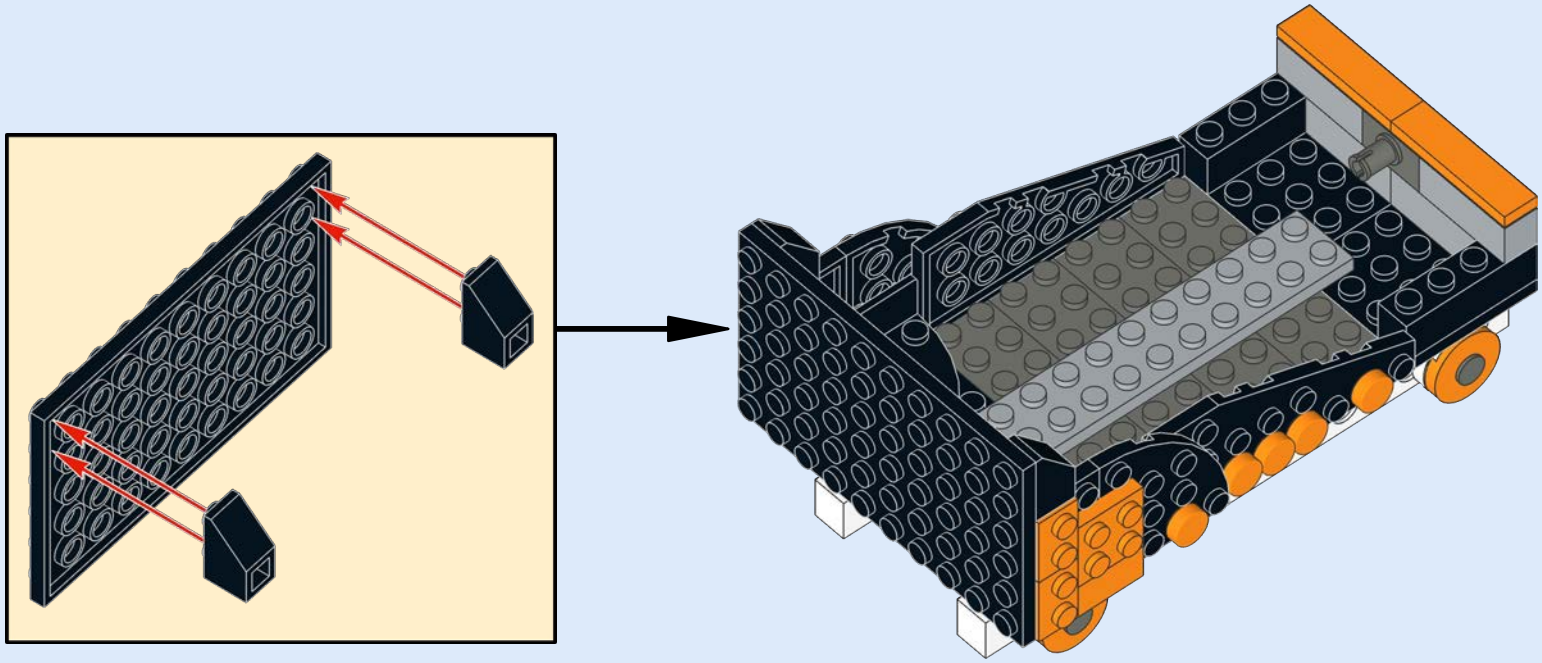

© Benedettelli 2020 - For NON-commercial use only - Please report improper use

98

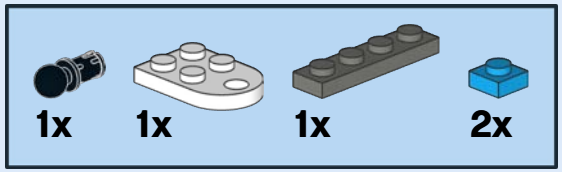

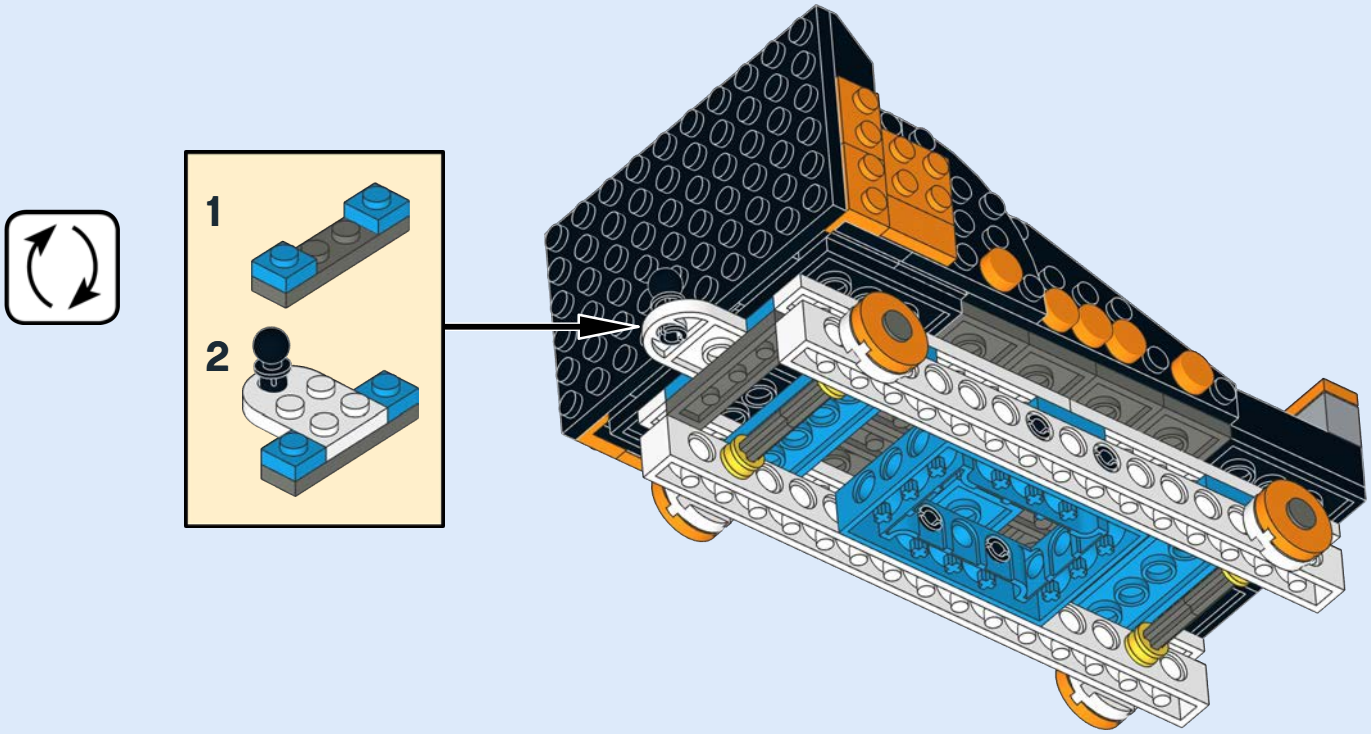

© Benedettelli 2020 - For NON-commercial use only - Please report improper use

99

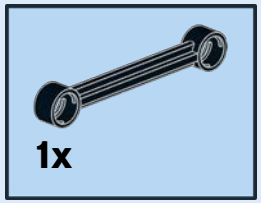

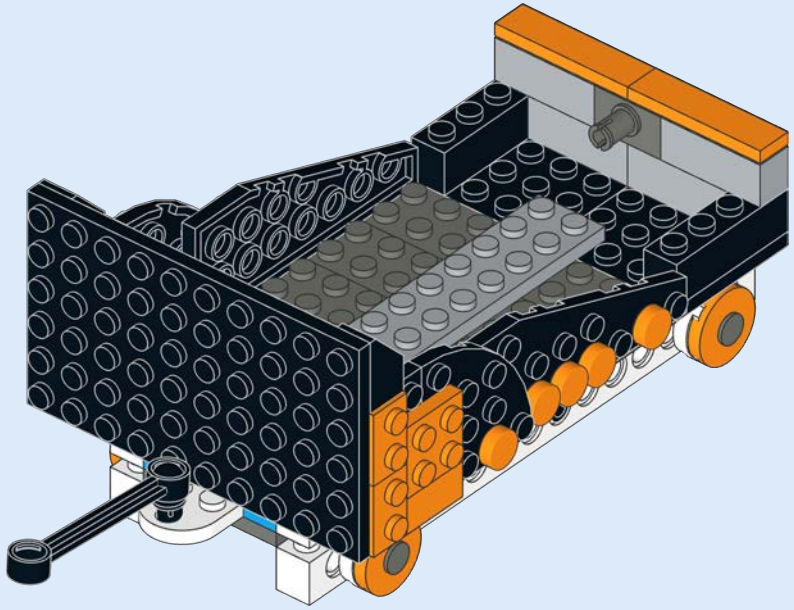

© Benedettelli 2020 - For NON-commercial use only - Please report improper use

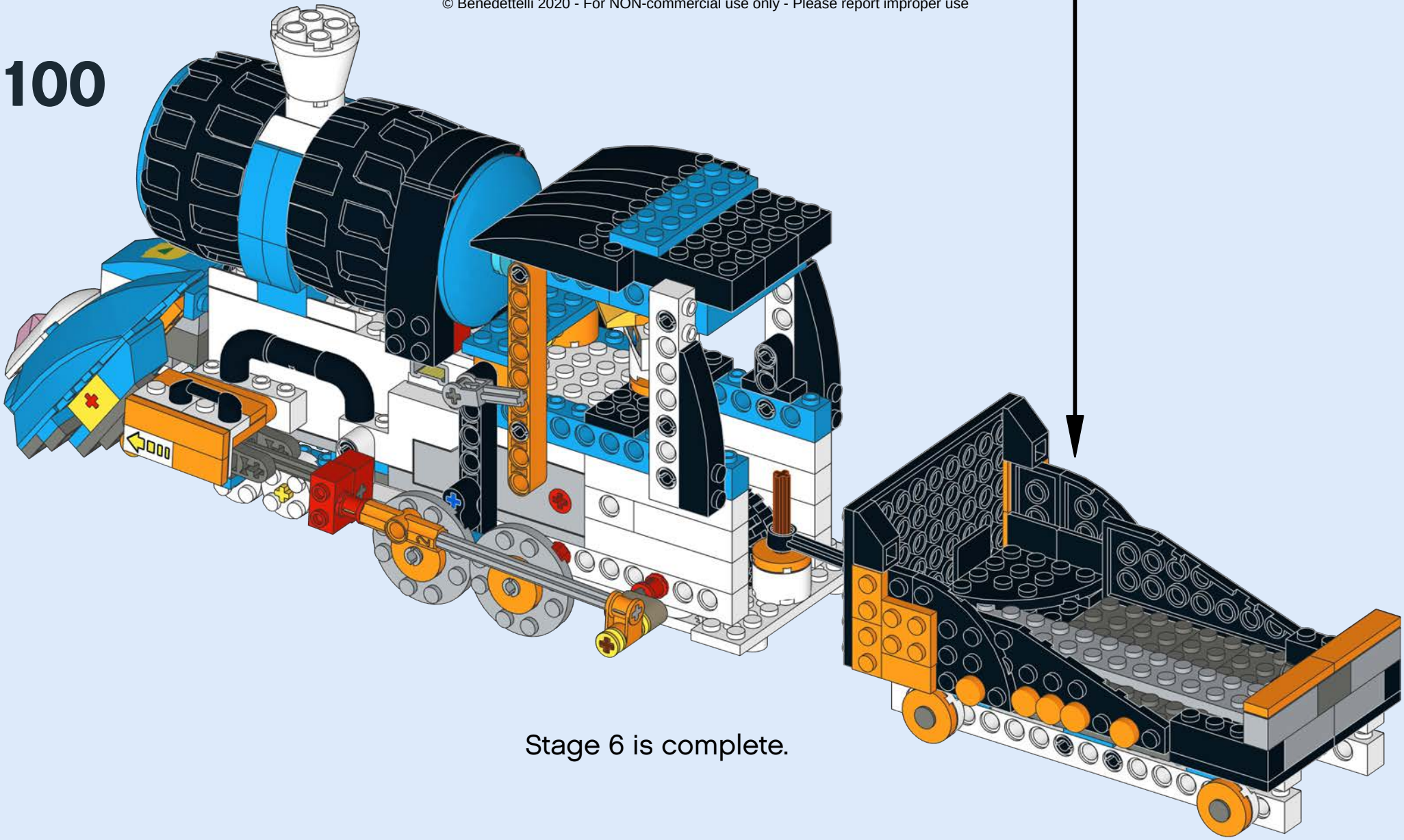

Stage 6 is complete.

© Benedettelli 2020 - For NON-commercial use only - Please report improper use

101

1

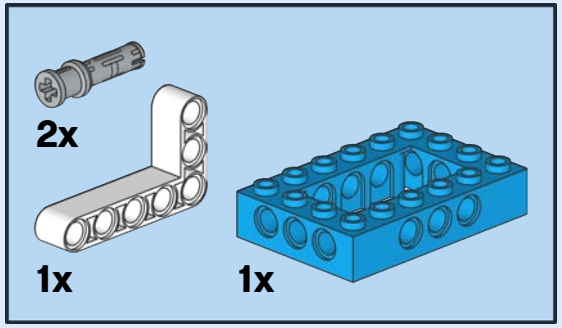

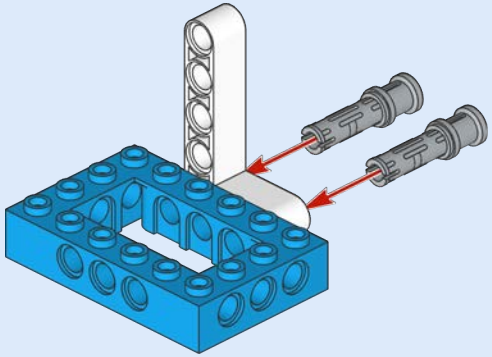

2

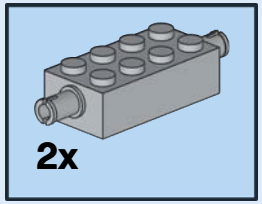

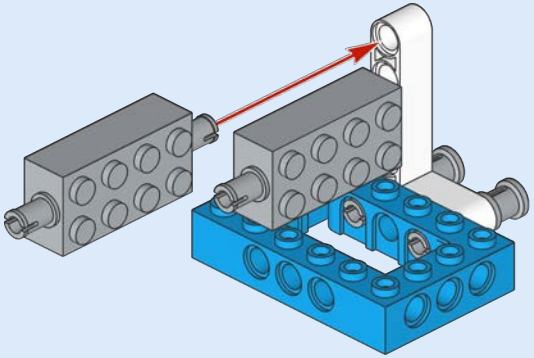

3

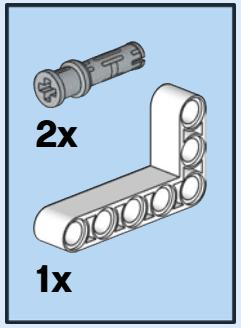

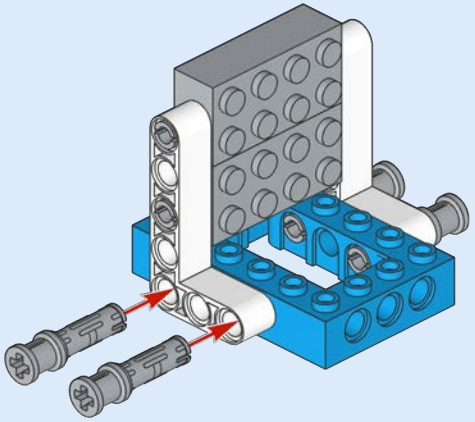

4

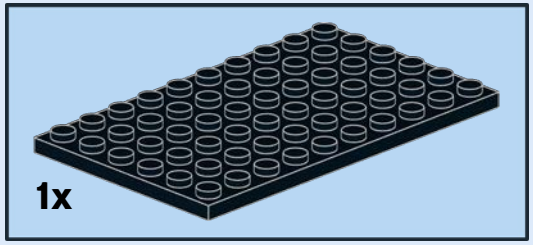

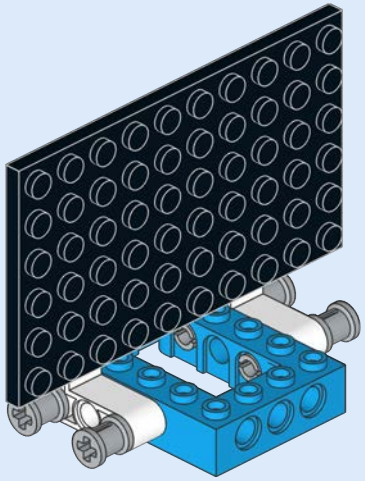

© Benedettelli 2020 - For NON-commercial use only - Please report improper use

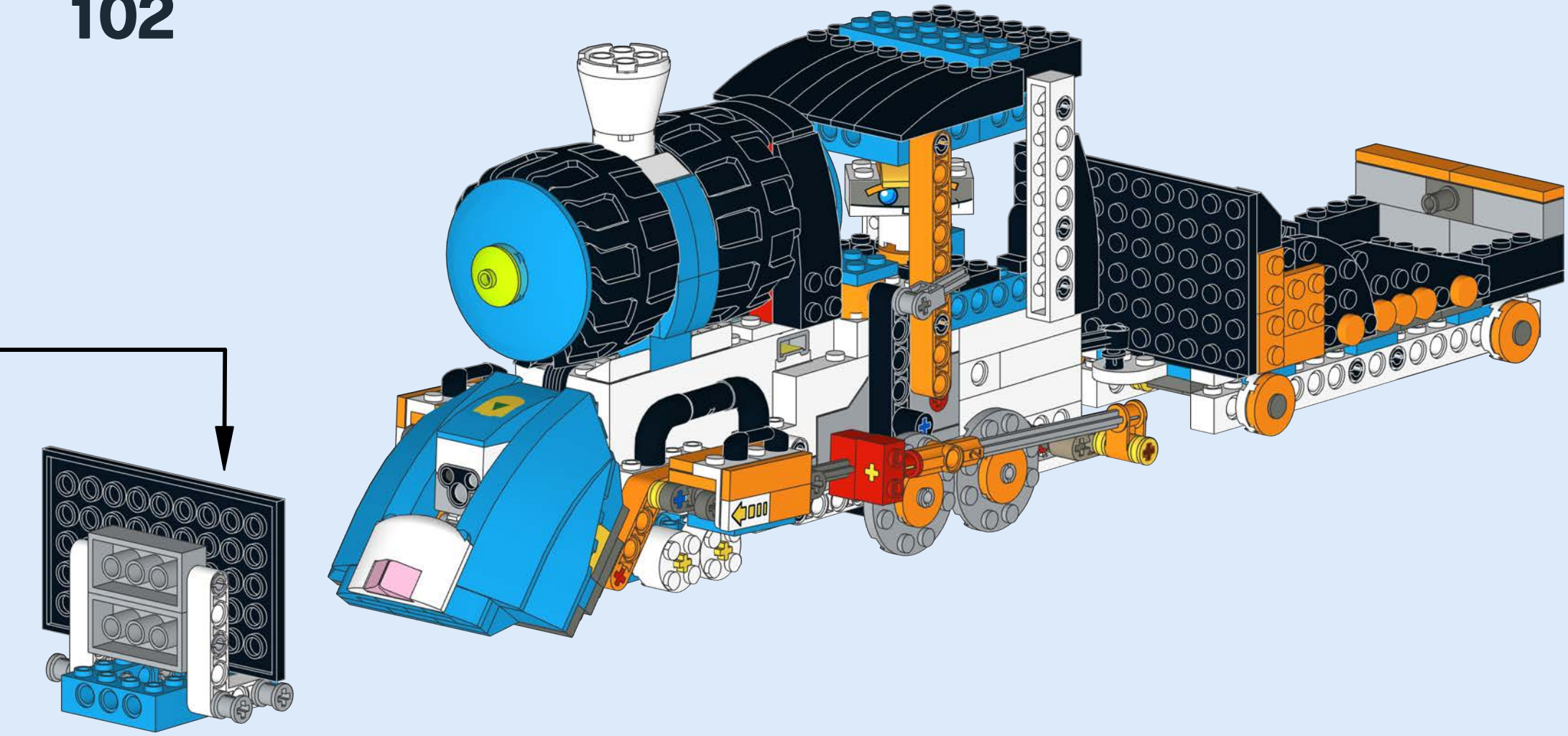

© Benedettelli 2020 - For NON-commercial use only - Please report improper use

BOOST Steam Train Programs

1.

2.

3.

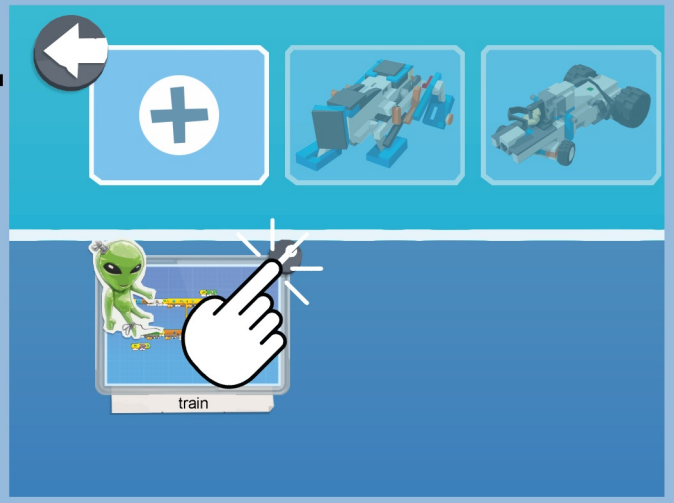

4.

© Benedettelli 2020 - For NON-commercial use only - Please report improper use

BOOST Steam Train - Simple Program

You can use program from assembly stage 1 onwards.

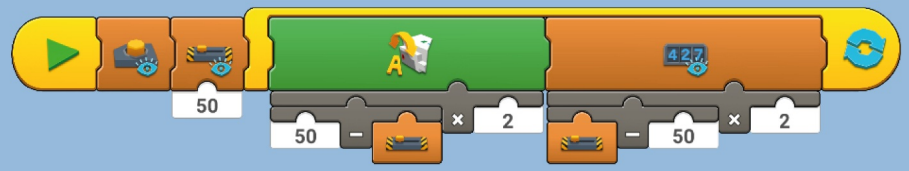

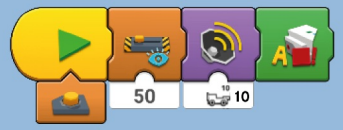

BOOST Steam Train - Advanced Program

You can use program from assembly stage 2 onwards.

composite condition block

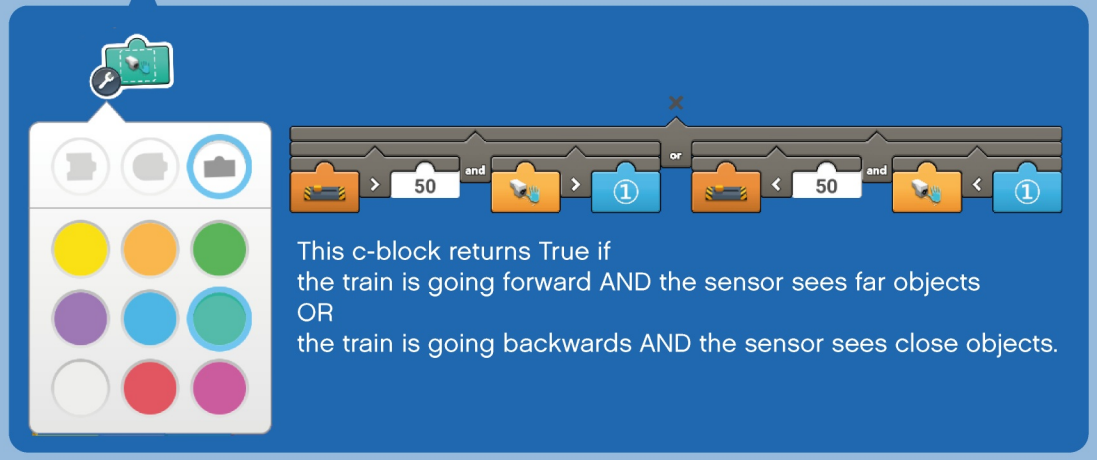

This c-block returns True if
the train is going forward AND the sensor sees far objects
OR
the train is going backwards AND the sensor sees close objects.

The train stops when it detects an object too close,
and restarts when the object moves away.
The train maintains a constant distance
from the object ahead (could be another moving train!),
whether we are moving forward or backward.
Many locomotives can drive together on the same line
without colliding into each other.

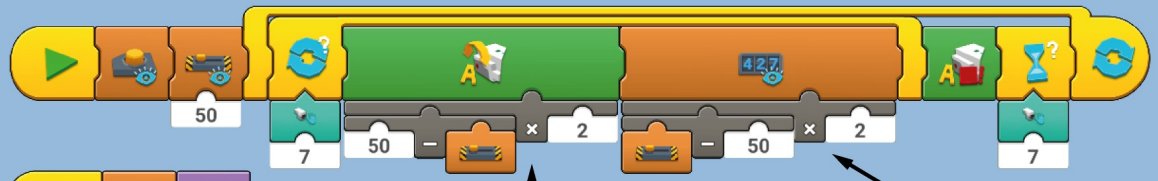

Press the button
on the remote
to stop the train, whistle,
and reset the slider
to the middle position.

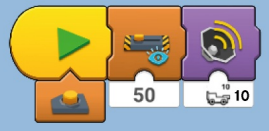

This formula transforms the 0 ... 100 slider position
into a -100 ... 100 speed range for the motor
(going in reverse)

This formula transforms the 0 ... 100 slider position
into a -100 ... 100 speed value to be displayed